CONSTRUCTION PLANS FOR
MADRID FIRE SUPPRESSION SYSTEM IMPROVEMENTS
NM HIGHWAY 14
SANTA FE COUNTY, NEW MEXICO
JANUARY, 2025

VICINITY MAP T-13-Z

NOTE

1. ALL IMPROVEMENTS WITHIN NMDOT RIGHT OF WAY SHALL ADHERE TO THE NMDOT 2014 EDITION OF HIGHWAY AND BRIDGE CONSTRUCTION SPECIFICATIONS AND STANDARD DRAWINGS. IMPROVEMENTS RELATING TO TERRAIN MANAGEMENT MUST ALSO COMPLY WITH SECTION 7.17 OF THE SANTA FE COUNTY SUSTAINABLE LAND DEVELOPMENT CODE.
2. IMPROVEMENTS ASSOCIATED WITH THIS PROJECT DO NOT MEET THE DEFINITION OF A PUBLIC WATER SYSTEM.

INDEX TO DRAWINGS

1	TITLE SHEET
2	GENERAL NOTES
3	MADRID WATERLINE 10+00 TO 13+75
4	MADRID WATERLINE 13+00 TO 20+00
5	MADRID WATERLINE 19+50 TO 21+75
6	GRADING AND DRAINAGE PLAN
7	CONSTRUCTION DETAILS
8	CONSTRUCTION DETAILS
9	TANK SPECIFICATIONS
10	TRAFFIC CONTROL PLAN
11	TRAFFIC CONTROL PLAN
12	TRAFFIC CONTROL DETAILS
13	STOCKPILE PLAN
14	EROSION CONTROL PLAN
15	EROSION CONTROL NOTES
16	EROSION CONTROL DETAILS

TIERRA WEST, LLC
5571 MIDWAY PARK PLACE NE
ALBUQUERQUE, NEW MEXICO 87109
(505) 858-3100
www.tierrawestllc.com

REV	SHEETS	COUNTY ENGINEER	DATE	USER DEPT.	DATE	USER DEPT.	DATE

ENGINEERS STAMP & SIGNATURE

RONALD R. BOHANNAN NEW MEXICO 7868 PROFESSIONAL ENGINEER

01-17-25

RONALD R. BOHANNAN
P.E. #7868

APPROVALS	ENGINEER	DATE

APPROVED FOR CONSTRUCTION

Meghan J. McDonald,P.E. Date
Engineer Manager, NMAMLP

PROJECT NO.
EMNRD-MMD-2025-01

SHEET
1 OF 16

TIERRA WEST, LLC
5571 Midway Park Place NE
Albuquerque, NM 87109
Phone: 505-858-3100
Fax: 505-858-1118

Z:\2023\2023094 Madrid Stormwater & Erosion Control Project\dwg\Construction\COVER.dwg Jan 17, 2025 - 9:14am

GENERAL NOTES

1. ALL WORK DETAILED ON THESE PLANS, EXCEPT AS OTHERWISE STATED OR PROVIDED HEREON, SHALL BE CONSTRUCTED IN ACCORDANCE WITH THE 2014 NMDOT SPECS FOR HIGHWAY AND BRIDGE CONSTRUCTION AND THE SANTA FE COUNTY SUSTAINABLE LAND DEVELOPMENT CODE CHAPTER 7.17 FOR TERRAIN MANAGEMENT. THESE CODES WILL BE REFERRED TO HEREAFTER AS "STANDARD SPECIFICATIONS. SEE NOTE ON SHEET 3

2. ALL WORK ON THIS PROJECT SHALL BE PERFORMED IN ACCORDANCE WITH APPLICABLE FEDERAL, STATE, AND LOCAL LAWS, ORDINANCES, RULES, AND REGULATIONS CONCERNING CONSTRUCTION SAFETY AND HEALTH.

3. CONTRACTOR SHALL ASSUME THE SOLE AND COMPLETE RESPONSIBILITY FOR THE JOB SITE CONDITIONS DURING THE COURSE OF CONSTRUCTION OF THIS PROJECT, INCLUDING SAFETY OF ALL PERSONS AND PROPERTY. THIS REQUIREMENT SHALL APPLY CONTINUOUSLY AND NOT BE LIMITED TO NORMAL WORKING HOURS. CONTRACTOR SHALL DEFEND, INDEMNIFY, AND HOLD HARMLESS THE OWNER AND ENGINEER FROM ANY AND ALL LIABILITY REAL OR ALLEGED, IN CONNECTION WITH THE PERFORMANCE OF WORK ON THIS PROJECT, EXCEPT LIABILITY ARISING FROM THE SOLE NEGLIGENCE OF THE OWNER OR ENGINEER.

4. AN EXCAVATION/CONSTRUCTION PERMIT WILL BE REQUIRED BEFORE BEGINNING ANY WORK. NMDOT TRAFFIC CONTROL BARRICADING WITHIN A RIGHT-OF-WAY. PERMIT IS REQUIRED PRIOR TO ANY WORK WITHIN STATE RIGHT OF WAY (7 DAY PROCESSING PERIOD)

5. CONTRACTOR SHALL NOTIFY THE CONSTRUCTION ENGINEER (OR PROJECT MANAGER) NOT LESS THAN SEVEN (7) DAYS PRIOR TO STARTING WORK IN ORDER THAT THE COUNTY SURVEYOR MAY TAKE NECESSARY MEASURES TO INSURE THE PRESERVATION OF SURVEY MONUMENTS. CONTRACTOR SHALL NOT DISTURB PERMANENT SURVEY MONUMENTS WITHOUT THE CONSENT OF THE COUNTY SURVEYOR AND SHALL NOTIFY THE COUNTY SURVEYOR AND BEAR THE EXPENSE OF REPLACING ANY THAT MAY BE DISTURBED WITHOUT PERMISSION. ONLY THE COUNTY SURVEYOR SHALL REPLACE SURVEY MONUMENTS. WHEN A CHANGE IS MADE IN THE FINISHED ELEVATIONS OF THE PAVEMENT OF ANY ROADWAY IN WHICH A PERMANENT SURVEY MONUMENT IS LOCATED, CONTRACTOR SHALL, AT HIS OWN EXPENSE, ADJUST THE MONUMENT COVER TO THE NEW GRADE UNLESS OTHERWISE SPECIFIED.

6. EXISTING UTILITY LINE LOCATIONS ARE SHOWN IN AN APPROXIMATE MANNER ONLY, AND LINES MAY EXIST WHERE NONE ARE SHOWN. TWO (2) WORKING DAYS PRIOR TO ANY EXCAVATION, CONTRACTOR SHALL CONTACT NEW MEXICO ONE CALL SYSTEM (260-1990) FOR LOCATION OF EXISTING UTILITIES. CONTRACTOR SHALL THEN EXCAVATE AND VERIFY THE HORIZONTAL AND VERTICAL LOCATIONS OF ALL PERTINENT EXISTING UTILITIES AND/OR OBSTRUCTIONS. SHOULD A CONFLICT EXIST, THE CONTRACTOR SHALL NOTIFY THE ENGINEER SO THE CONFLICT CAN BE RESOLVED WITH A MINIMUM AMOUNT OF DELAY. CONTRACTOR SHALL THEN COORDINATE RELOCATION OF UTILITY LINES WITH UTILITY COMPANIES AS REQUIRED. ANY DAMAGE CAUSED BY FAILURE TO LOCATE, IDENTIFY, AND PRESERVE ANY EXISTING UTILITIES IS THE FULL RESPONSIBILITY OF THE CONTRACTOR.

7. CONTRACTOR SHALL ASSIST THE ENGINEER/INSPECTOR IN THE RECORDING OF DATA ON ALL UTILITY LINES AND ACCESSORIES AS REQUIRED BY NMDOT AND SANTA FE COUNTY FOR THE PREPARATION OF "AS BUILT" DRAWINGS. CONTRACTOR SHALL NOT COVER UTILITY LINES AND ACCESSORIES UNTIL ALL DATA HAS BEEN RECORDED.

8. CONTRACTOR SHALL ASSUME FINANCIAL RESPONSIBILITY FOR ANY DAMAGE TO EXISTING PAVEMENT, PAVEMENT MARKINGS, SIGNAGE, CURB AND GUTTER, HANDICAP RAMPS, AND SIDEWALK DURING CONSTRUCTION APART FROM THOSE SECTIONS INDICATED ON THE PLANS, AND SHALL REPAIR OR REPLACE, PER THE STANDARD SPECIFICATIONS, ANY SUCH DAMAGE.

9. CONTRACTOR SHALL MAINTAIN A GRAFFITI-FREE WORK SITE. CONTRACTOR SHALL PROMPTLY REMOVE ANY AND ALL GRAFFITI FROM EQUIPMENT, WHETHER PERMANENT OR TEMPORARY.

10. CONTRACTOR SHALL BE RESPONSIBLE TO PROVIDE AND MAINTAIN ALL CONSTRUCTION SIGNING UNTIL THE PROJECT HAS BEEN ACCEPTED BY THE CITY AND OTHER JURISDICTIONAL AUTHORITIES WHERE APPLICABLE.

11. CONSTRUCTION ACTIVITY SHALL BE LIMITED TO THE PROPERTY AND/OR PROJECT LIMITS SHOWN. ANY DAMAGE TO ADJACENT PROPERTIES RESULTING FROM THE CONSTRUCTION PROCESS IS THE RESPONSIBILITY OF THE CONTRACTOR, INCLUDING ANY SUCH COSTS INCURRED.

12. SOIL REMOVALS MAY BE DISPOSED OF ON NORTHERN HALF OF SITE AS DIRECTED BY THE MADRID WATER BOARD PROJECT MANAGER.

UTILITIES

1. WATER & SEWER IF WITHIN NMDOT RIGHT OF WAY WILL REQUIRE A UTILITY PERMIT THAT SHALL BE SUBMITTED AND AND CONCURRED PRIOR TO INSTALLATION

2. ALL UTILITIES AND UTILITY SERVICE LINES SHALL BE INSTALLED PRIOR TO PAVING. EXISTING VALVES AND MANHOLES SHALL NOT BE BURIED OR PAVED OVER BUT RIMS SHALL BE ADJUSTED TO MATCH NEW GRADE.

3. MANHOLE RIMS, FIRE HYDRANT ELEVATIONS, AND FLANGE ELEVATIONS SHOWN ARE APPROXIMATE. CONTRACTOR SHALL FIELD VERIFY AND ADJUST TO FINAL PAVEMENT OR SURFACE GRADES.

4. PROPOSED WATERLINE MATERIALS SHALL BE PVC PIPE MEETING AWWA C-900: DR18 REQUIREMENTS (6" – 12") OR DUCTILE IRON PIPE MEETING AWWA C-150 REQUIREMENTS (6" – 48").

5. PROPOSED WATERLINE MATERIALS MUST COMPLY WITH NMDOT STANDARD SPECIFICATIONS.

6. ALL WATERLINE FITTINGS, VALVES, BENDS, TEES, CROSSES AND APPURTENANCES SHALL HAVE RESTRAINED JOINTS UNLESS OTHERWISE NOTED ON THE PLANS. THE JOINT RESTRAINT REQUIREMENTS SHOULD BE DELINEATED WITHIN A JOINT RESTRAINT TABLE.

7. ALL FINAL BACKFILL FOR TRENCHES SHALL BE COMPACTED TO A MINIMUM OF 95% MAXIMUM DENSITY PER ASTM D-1557 AND AS DIRECTED BY STANDARD SPECIFICATIONS SECTION 701.14.2 AND STANDARD DRAWING NUMBER 2465.

8. TRACER WIRE SHALL BE INCLUDED FOR ALL PUBLIC WATER AND SEWER MAINS AND FOR WATER SERVICES IN ACCORDANCE WITH NMDOT DETAILS.

9. CONTRACTOR SHALL PROVIDE THE PROPOSED HYDRO TESTING PLANS TO MADRID WATER DOMESTIC MUTUAL FOR APPROVAL PRIOR TO BEGINNING TESTING OPERATIONS.

10. AT UTILITY CROSSINGS, WHERE LESS THAN 18" OF VERTICAL SEPARATION FROM STORM DRAIN PIPING OR STRUCTURES IS PROPOSED, LEAN FILL CONSTRUCTION SHALL BE USED TO PROTECT THE WATER OR SEWER LINE. LEAN FILL SHALL EXTEND A PERPENDICULAR DISTANCE OF 5 FEET ON EACH SIDE OF THE STORM PIPE OR STRUCTURE.

OTHER COMMON NOTES

1. ALL EXCAVATION, TRENCHING, AND SHORING ACTIVITIES MUST BE ACCOMPLISHED IN ACCORDANCE WITH OSHA 29CFR 1926.650 SUBPART P.

2. IN ADVANCE OF CONSTRUCTION, CONTRACTOR SHALL DETERMINE IF OVERHEAD UTILITY LINES, SUPPORT STRUCTURES, POLES, GUYS, ETC. ARE AN OBSTRUCTION TO CONSTRUCTION OPERATIONS. IF ANY OBSTRUCTION TO CONSTRUCTION OPERATIONS IS EVIDENT, CONTRACTOR SHALL BE RESPONSIBLE FOR COORDINATING WITH THE APPROPRIATE UTILITY OWNER TO REMOVE OR SUPPORT THE UTILITY OBSTRUCTION. ANY COST ASSOCIATED WITH THIS EFFORT SHALL BE THE RESPONSIBILITY OF CONTRACTOR.

3. PNM WILL PROVIDE AT NO COST TO THE COUNTY OR THE CONTRACTOR THE REQUIRED PERSONNEL FOR INSPECTION OR OBSERVATION DEEMED NECESSARY BY PNM WHILE THE CONTRACTOR IS EXPOSING PNM'S CABLES. HOWEVER, THE CONTRACTOR SHALL BE CHARGED THE TOTAL COST ASSOCIATED WITH REPAIRS TO ANY DAMAGED CABLES OR FOR ANY COST ASSOCIATED WITH SUPPORTING OR RELOCATING THE POLES AND CABLES DURING CONSTRUCTION.

4. CONTRACTOR SHALL SUPPORT AND PROTECT ALL EXISTING, UNDERGROUND UTILITY LINES WHICH BECOME EXPOSED DURING CONSTRUCTION. PAYMENT FOR SUPPORTING WORK SHALL BE INCIDENTAL TO WATERLINE AND/OR SEWER LINE COSTS.

5. CONTRACTOR IS TO SUPPORT, PROTECT, AND MAINTAIN THE INTEGRITY OF ALL UNDERGROUND TELEPHONE, ELECTRIC CABLES AND CABLE TELEVISION UTILITIES AT NO ADDITIONAL COST TO THE OWNER. CABLE IS TO BE SUPPORTED AT A MAXIMUM SPACING OF FIFTEEN (15) FEET. CONTRACTOR SHALL COORDINATE WITH AND MAKE NECESSARY PAYMENT (IF ANY) TO UTILITY OWNER FOR DE-ENERGIZATION OF CABLES OR SUPPORT OF CABLES BY THE UTILITY OWNER.

6. CONTRACTOR SHALL PROMPTLY CLEAN UP ANY MATERIAL EXCAVATED WITHIN THE PUBLIC RIGHT-OF-WAY OR PRIVATE ROADWAY EASEMENTS TO PREVENT ANY EXCAVATED MATERIAL BEING WASHED DOWN THE STREET OR INTO ANY PUBLIC DRAINAGE FACILITY.

7. CONTRACTOR SHALL CONDUCT ALL WORK IN A MANNER WHICH WILL MINIMIZE INTERFERENCE WITH LOCAL TRAFFIC.

8. ALL EXISTING SIGNS, MARKERS, DELINEATORS, ETC., WITHIN THE CONSTRUCTION LIMITS SHALL BE REMOVED, STORED AND RE-SET BY THE CONTRACTOR.

9. DISPOSAL SITE FOR ALL EXCESS EXCAVATION MATERIAL AND UNSUITABLE MATERIAL SHALL BE ARRANGED BY THE CONTRACTOR IN COMPLIANCE WITH ALL APPLICABLE ENVIRONMENTAL REGULATIONS. NO SEPARATE MEASUREMENT OR PAYMENT WILL BE MADE FOR COSTS ASSOCIATED WITH OBTAINING A DISPOSAL SITE AND HAUL THERETO.

10. IF CULTURAL RESOURCES, SUCH AS HISTORIC OR PREHISTORIC ARTIFACTS, OR HUMAN REMAINS ARE DISCOVERED DURING EXCAVATION OR CONSTRUCTION, WORK SHALL CEASE AND THE CONSTRUCTION ENGINEER SHALL NOTIFY THE COUNTY OFFICE OF THE MEDICAL EXAMINER AT (505) 272-3053. IF THE MEDICAL EXAMINER DETERMINES THAT HUMAN REMAINS ARE NOT PRESENT, THE CONSTRUCTION ENGINEER SHALL NOTIFY THE STATE HISTORIC PRESERVATION OFFICER (SHPO) AT 827-6320.

11. AD 241 DROP OFF POLICY MUST BE ADHERED TO ACROSS PAVEMENT SECTION. EDGE OF ASPHALT MUST TAPER TO GRADE AT A 3:1 MAXIMUM SLOPE

12. ALL NMDOT MONUMENTS MUST BE PRESERVED. IF AN NMDOT MONUMENT IS IN CONFLICT WITH THE PROPOSED IMPROVEMENTS PLEASE CONTACT NMDOT FOR GUIDANCE

AS BUILT INFORMATION
CONTRACTOR
WORK STAKED BY — DATE
MARKUPS RECORDED BY — DATE
ACCEPTANCE BY — DATE
FIELD VERIFICATION BY — DATE
DRAWINGS CORRECTED BY — DATE
MICRO-FILM INFORMATION
RECORDED BY — DATE
NO.

BENCH MARKS

SURVEY INFORMATION
FIELD NOTES

NO.	BY	DATE

ENGINEER'S SEAL
RONALD R. BOHANNAN
NEW MEXICO
7868
PROFESSIONAL ENGINEER
06/26/24

NO.	DATE	REMARKS	BY

REVISIONS

DESIGN
DESIGNED BY: JN — DATE: JUNE 2024
DRAWN BY: RMG — DATE: JUNE 2024
DRAWN NAME: MADRID WATER TANK IMPROVEMENTS — JOB NO.: 2023094
CHECKED BY: RRB — DATE: JUNE 2024

TIERRA WEST, LLC
5571 MIDWAY PARK PLACE NE
ALBUQUERQUE, NEW MEXICO 87109
(505) 858-3100
www.tierrawestllc.com

NEW MEXICO ENERGY MINERAL AND NATURAL RESOURCE
ABANDONED MINE LAND PROGRAM

TITLE:
MADRID WATER - FIRE SUPPRESSION IMPROVEMENTS
GENERAL NOTES

LAST DESIGN UPDATE — MO./DAY/YR. — MO./DAY/YR.

TIERRA WEST, LLC
5571 Midway Park Place NE
Albuquerque, NM 87109
Phone: 505-858-3100
Fax: 505-858-1118

PROJECT NO. EMNRD-MMD-2025-01 | ZONE MAP NO. – | SHEET 2 OF 16

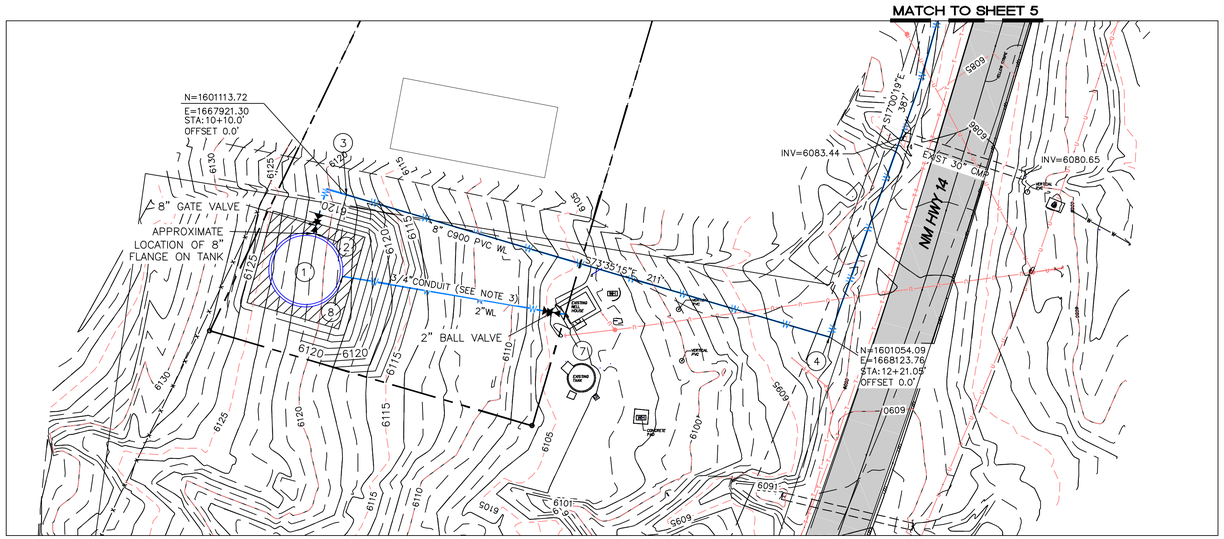

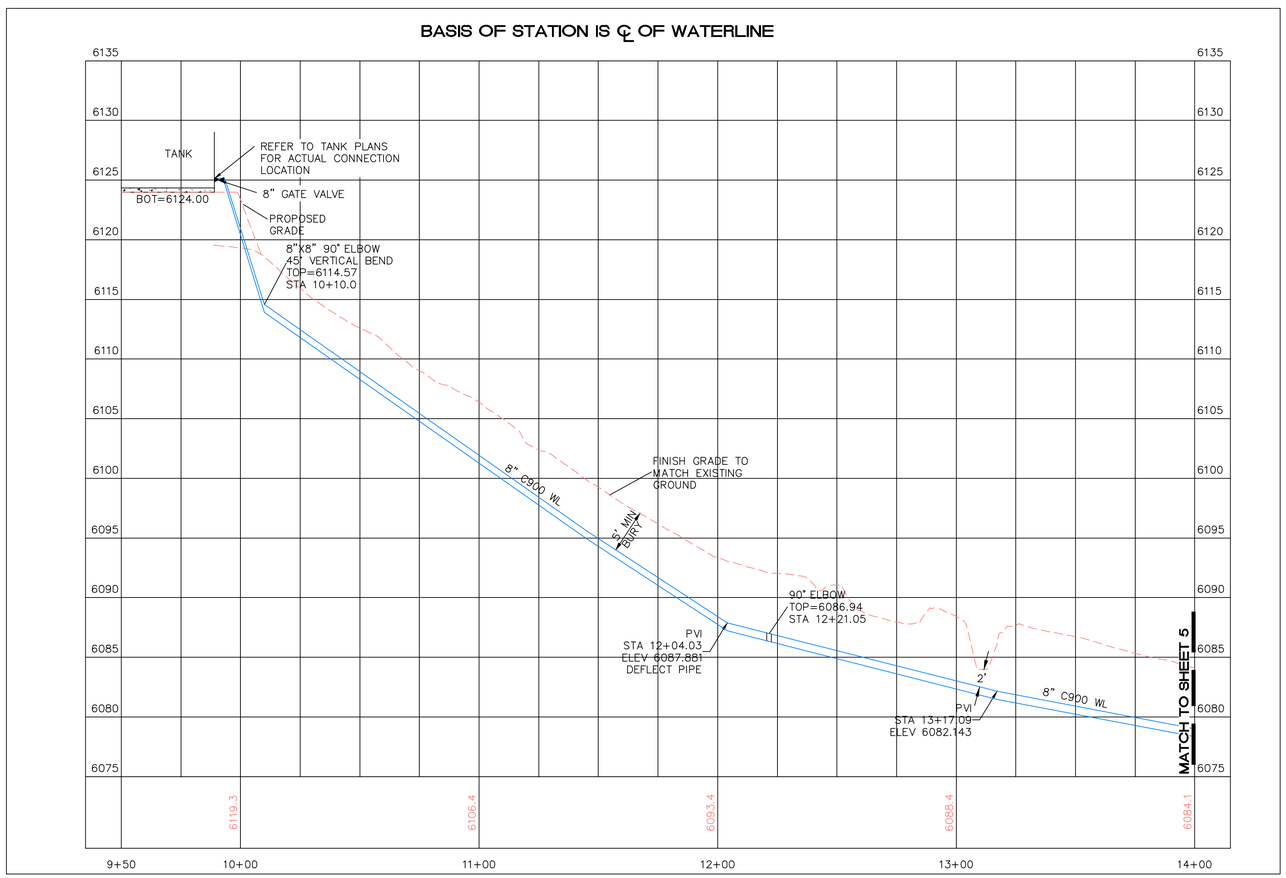

GRAPHIC SCALE

(IN FEET)
1 inch = 30 ft.

LEGEND

- BOUNDARY LINE
- EXISTING EDGE OF PAVEMENT
- EXISTING POWER POLE
- EXISTING WATER METER
- EXISTING OVERHEAD POWER LINE
- EXISTING UNDERGROUND TELEPHONE LINE
- EXISTING GUY ANCHOR
- EASEMENT
- PROPOSED 8" WATERLINE

KEYED NOTES

1. PROPOSED TANK 125000 GAL 30' DIA 25' HIGH BOTTOM=6124.00
2. CONNECT TO TANK PER MANUFACTURER SPECIFICATIONS IE=6124.6
3. 10+10.00 0.0 RT 2-45° ELBOWS
4. 12+21.05 0.0 RT 2-45° ELBOWS
5. NOT USED
6. 2" END CAP TO BE INSTALLED BY UTILITY CONTRACTOR AT INTERIM
7. 11+11.8 21.2 RT ELEV AT EXIST WELL HOUSE 6100.00
8. 10+25.4 35.1 RT ELEV AT TANK HOUSE 6124.00

NOTES

1. "UTILITY CONTRACTOR" REFERS TO THE PARTY RESPONSIBLE FOR INSTALLING TANK SITE PLAN AND THE PROPOSED FIRE SUPPRESSION LINE EXTENDING FROM THE TANK FLANGE STUB OUT INDICATED ON THIS SHEET TO THE TIE-IN POINT AT THE EXISTING FIRE SUPPRESSION LINE.
2. "TANK CONTRACTOR" REFERS TO THE PARTY RESPONSIBLE FOR INSTALLING THE PROPOSED WATER STORAGE TANK AND CONSTRUCTING ITS FOUNDATION.
3. 3/4" PEP CONDUIT FOR SCADA SYSTEM TO BE INSTALLED IN SHARED TRENCH WITH 2" FILL LINE AT MINIMUM 1' OF SEPARATION.
4. UPGRADES TO WELL HOUSE EQUIPMENT TO INTEGRATE THE NEW TANK WILL BE THE RESPONSIBILITY OF MADRID WATER MUTUAL DOMESTIC WATER COMPANY.
5. ALL WATERLINES TO BE C 900 PVC, AT ARROYO CROSSING TO BE DUCTILE IRON (SEE SHEET 5)
6. TRENCH FROM WELL HOUSE TO TANK WILL INCLUDE A SEPARATE CONDUIT FOR A SCADA PRESSURE TRANSDUCER.
7. UTILITY CONTRACTOR IS RESPONSIBLE FOR THE WATERLINE UP TO THE LIMITS DESIGNATED ON THIS SHEET.
8. INSTALLATION OF THE WATER TANK AND TANK FOUNDATION IS THE RESPONSIBILITY OF THE TANK INSTALLER.
9. ACCESS TO SITE FOR MATERIAL DELIVERY AND STAGING IS LIMITED. IT IS THE RESPONSIBILITY OF THE TANK INSTALLER TO REVIEW DELIVER AND INSTALLATION LOGISTICS.
10. UTILITY CONTRACTOR TO REQUEST INSPECTIONS FOR WATERLINE PRIOR TO BACKFILLING.
11. MINIMUM BEND RADIUS OF 8" C900 PIPE IS 188.54 FT. MAXIMUM DEFLECTION ANGLE IS 3 DEGREES.

SITE BENCHMARK

OPUS POINT
SET CP-NO. 5 REBAR
WITH ALUMINUM CAP
"PS 11993"
N=1,601,031.522
E=1,668,078.227
EL=6098.877

CAUTION

ALL EXISTING UTILITIES SHOWN WERE OBTAINED FROM RESEARCH, AS-BUILTS, SURVEYS OR INFORMATION PROVIDED BY OTHERS. IT SHALL BE THE SOLE RESPONSIBILITY OF THE CONTRACTOR TO CONDUCT ALL NECESSARY FIELD INVESTIGATIONS PRIOR TO AND INCLUDING ANY EXCAVATION, TO DETERMINE THE ACTUAL LOCATION OF UTILITIES AND OTHER IMPROVEMENTS, PRIOR TO STARTING THE WORK. ANY CHANGES FROM THIS PLAN SHALL BE COORDINATED WITH AND APPROVED BY THE ENGINEER.

AS BUILT INFORMATION
CONTRACTOR | DATE
WORK STAKED BY | DATE
INSPECTED BY | DATE
ACCEPTANCE | DATE
FIELD VERIFICATION BY | DATE
DRAWINGS CORRECTED BY | DATE
MICRO-FILM INFORMATION
RECORDED BY | DATE
NO.

BENCH MARKS

SURVEY INFORMATION
FIELD NOTES
NO. | BY | DATE

ENGINEER'S SEAL
RONALD R. BOHANNAN
NEW MEXICO
7868
PROFESSIONAL ENGINEER
06/26/24

NO.	DATE	REMARKS	BY
		REVISIONS	

DESIGN
DESIGNED BY: JN — DATE: JUNE 2024
DRAWN BY: RMG — DATE: JUNE 2024
DRAWN NAME: MADRID WATER TANK IMPROVEMENTS — JOB NO.: 2023094
CHECKED BY: RRB — DATE: JUNE 2024

TIERRA WEST, LLC
5571 MIDWAY PARK PLACE NE
ALBUQUERQUE, NEW MEXICO 87109
(505) 858-3100
www.tierrawestllc.com

NEW MEXICO ENERGY MINERAL AND NATURAL RESOURCE
ABANDONED MINE LAND PROGRAM

TITLE:
MADRID WATER - FIRE SUPPRESSION IMPROVEMENTS
STA 10+00 TO STA 14+00

LAST DESIGN UPDATE | MO./DAY/YR. | MO./DAY/YR.

PROJECT NO. EMNRD-MMD-2025-01 | ZONE MAP NO. – | SHEET 3 OF 16

TIERRA WEST, LLC
5571 Midway Park Place NE
Albuquerque, NM 87109
Phone: 505-858-3100
Fax: 505-855-1118

Z:\2023\2023094 Madrid Stormwater & Erosion Control Project\dwg\Construction\2023094-MU.dwg Aug 27, 2024 - 7:25am

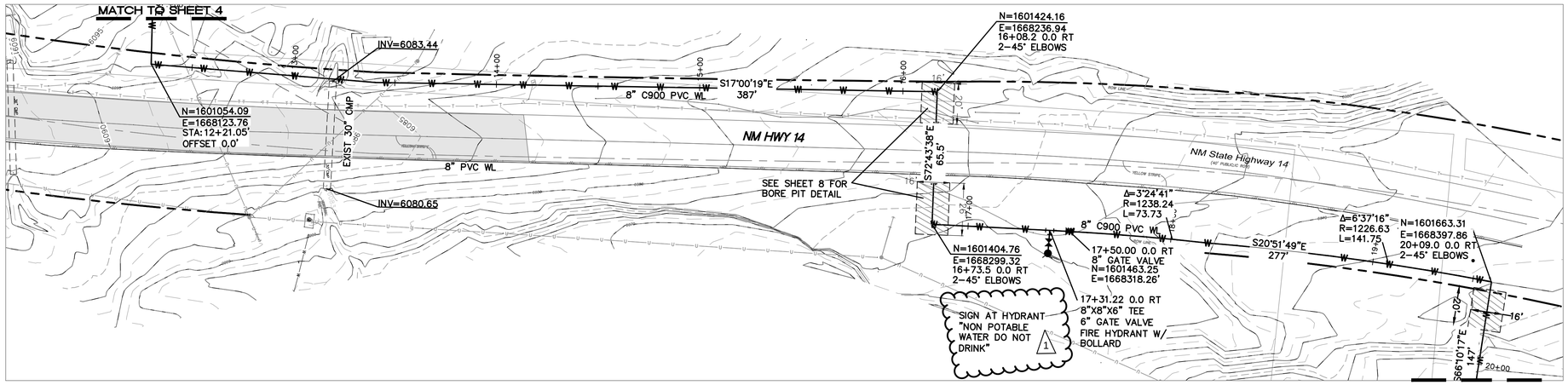

GRAPHIC SCALE

30 0 15 30

(IN FEET)
1 inch = 30 ft.

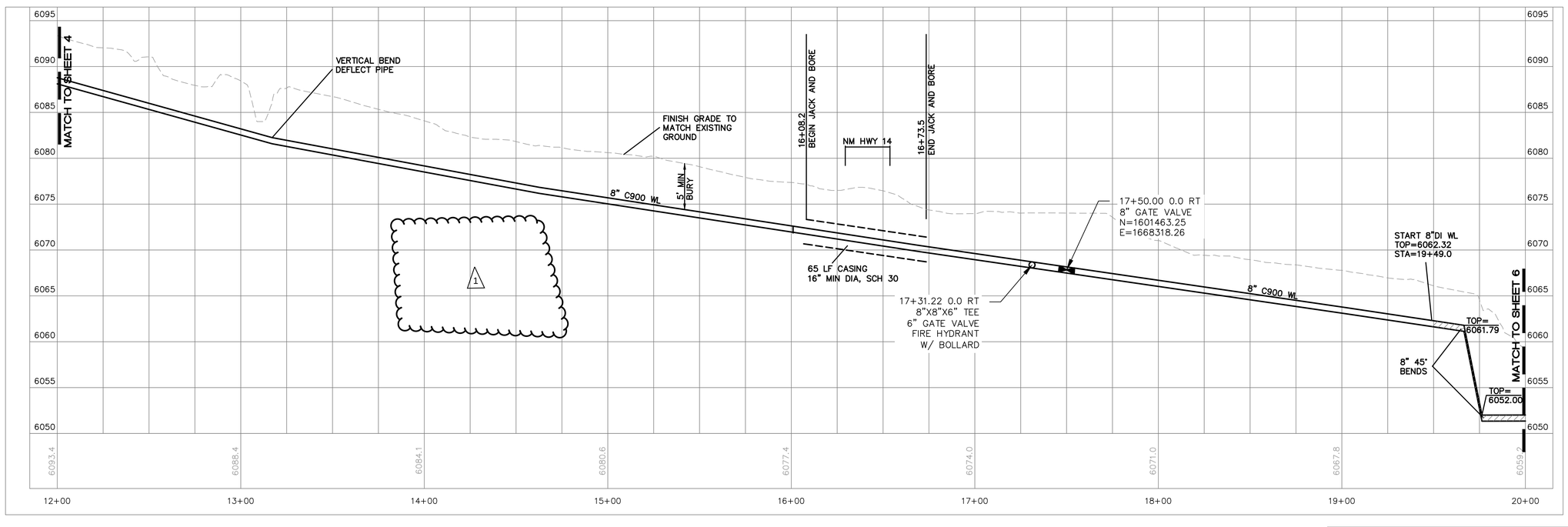

LEGEND

- BOUNDARY LINE
- EXISTING EDGE OF PAVEMENT
- EXISTING POWER POLE
- EXISTING WATER METER
- EXISTING OVERHEAD POWER LINE
- EXISTING UNDERGROUND TELEPHONE LINE
- EXISTING GUY ANCHOR
- EASEMENT
- PROPOSED 8" WATERLINE

CAUTION

ALL EXISTING UTILITIES SHOWN WERE OBTAINED FROM RESEARCH, AS-BUILTS, SURVEYS OR INFORMATION PROVIDED BY OTHERS. IT SHALL BE THE SOLE RESPONSIBILITY OF THE CONTRACTOR TO CONDUCT ALL NECESSARY FIELD INVESTIGATIONS PRIOR TO AND INCLUDING ANY EXCAVATION, TO DETERMINE THE ACTUAL LOCATION OF UTILITIES AND OTHER IMPROVEMENTS, PRIOR TO STARTING THE WORK. ANY CHANGES FROM THIS PLAN SHALL BE COORDINATED WITH AND APPROVED BY THE ENGINEER.

AS BUILT INFORMATION
CONTRACTOR | DATE
WORK STAKED BY | DATE
INSPECTOR ACCEPTANCE BY | DATE
FIELD VERIFICATION BY | DATE
DRAWINGS CORRECTED BY | DATE
MICRO-FILM INFORMATION
RECORDED BY | DATE
NO.

BENCH MARKS

SURVEY INFORMATION
FIELD NOTES
NO. | BY | DATE

ENGINEER'S SEAL
RONALD R. BOHANNAN
NEW MEXICO
7868
PROFESSIONAL ENGINEER
01/17/25

NO.	DATE	REMARKS	BY
1	1/21/25	Deleted Stray notes and stationing	

REVISIONS

DESIGN
DESIGNED BY: JN — DATE: JANUARY 2025
DRAWN BY: RMG — DATE: JANUARY 2025
DRAWN NAME: MADRID WATER TANK IMPROVEMENTS — JOB NO.: 2023094
CHECKED BY: RRB — DATE: JANUARY 2025

TIERRA WEST, LLC
5571 MIDWAY PARK PLACE NE
ALBUQUERQUE, NEW MEXICO 87109
(505) 858-3100
www.tierrawestllc.com

NEW MEXICO ENERGY MINERAL AND NATURAL RESOURCE
ABANDONED MINE LAND PROGRAM

TITLE:
MADRID WATER - FIRE SUPPRESSION IMPROVEMENTS
STA 12+00 TO STA 20+00

LAST DESIGN UPDATE | MO./DAY/YR. | MO./DAY/YR.

TIERRA WEST, LLC
5571 Midway Park Place NE
Albuquerque, NM 87109
Phone: 505-858-3100
Fax: 505-858-1118

PROJECT NO. EMNRD-MMD-2025-01 | ZONE MAP NO. – | SHEET 4 OF 16

Z:\2023\2023094 Madrid Stormwater & Erosion Control Project\dwg\Construction\2023094-MU.dwg Jan 17, 2025 - 9:25am

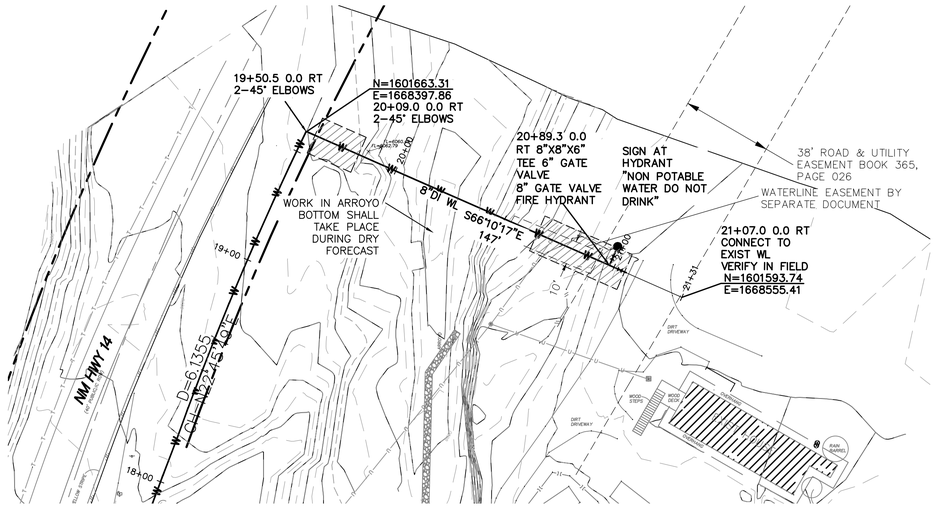

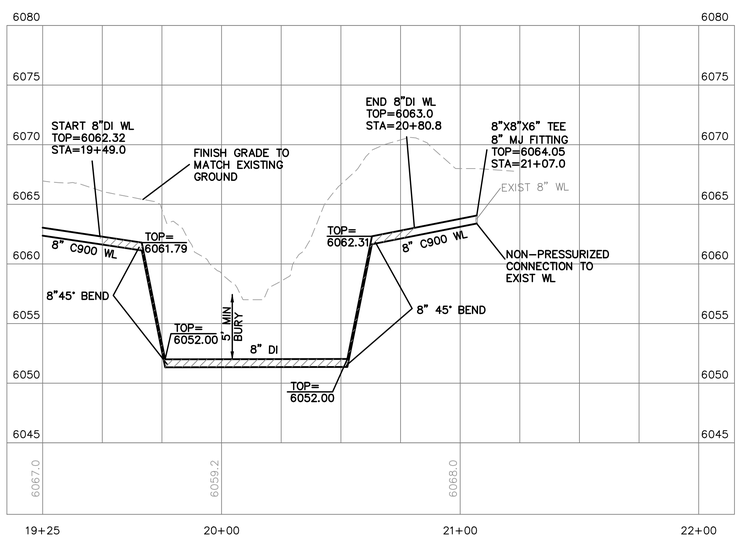

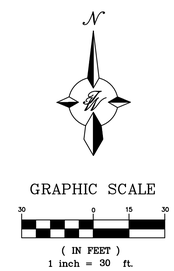

LEGEND

- BOUNDARY LINE
- EXISTING EDGE OF PAVEMENT
- EXISTING POWER POLE
- EXISTING WATER METER
- EXISTING OVERHEAD POWER LINE
- EXISTING UNDERGROUND TELEPHONE LINE
- EXISTING GUY ANCHOR
- EASEMENT
- PROPOSED 8" WATERLINE

NOTES

1. IF JOINTS ARE REQUIRED FOR THE SEGMENT OF PIPE UNDER THE ARROYO, BUTT FUSION WILL BE REQUIRED AT JOINTS.
2. IT WILL BE THE RESPONSIBILITY OF THE UTILITY CONTRACTOR TO DECOMMISSION AND ABANDON THE EXISTING FIRE SUPPRESSION LINE IN PLACE.

CAUTION

ALL EXISTING UTILITIES SHOWN WERE OBTAINED FROM RESEARCH, AS-BUILTS, SURVEYS OR INFORMATION PROVIDED BY OTHERS. IT SHALL BE THE SOLE RESPONSIBILITY OF THE CONTRACTOR TO CONDUCT ALL NECESSARY FIELD INVESTIGATIONS PRIOR TO AND INCLUDING ANY EXCAVATION, TO DETERMINE THE ACTUAL LOCATION OF UTILITIES AND OTHER IMPROVEMENTS, PRIOR TO STARTING THE WORK. ANY CHANGES FROM THIS PLAN SHALL BE COORDINATED WITH AND APPROVED BY THE ENGINEER.

AS BUILT INFORMATION
CONTRACTOR
WORK STAKED BY — DATE
INSPECTED BY — DATE
ACCEPTANCE — DATE
FIELD VERIFICATION BY — DATE
DRAWINGS CORRECTED BY — DATE
MICRO-FILM INFORMATION
RECORDED BY — DATE
NO.

BENCH MARKS

SURVEY INFORMATION
FIELD NOTES
NO. | BY | DATE

ENGINEER'S SEAL
RONALD R. BOHANNAN
NEW MEXICO
7868
PROFESSIONAL ENGINEER
01/17/25

REVISIONS
NO. | DATE | REMARKS | BY

DESIGN
DESIGNED BY: JN — DATE: JANUARY 2025
DRAWN BY: RMG — DATE: JANUARY 2025
DRAWN NAME: MADRID WATER TANK IMPROVEMENTS — JOB NO.: 2023094
CHECKED BY: RRB — DATE: JANUARY 2025

TIERRA WEST, LLC
5571 MIDWAY PARK PLACE NE
ALBUQUERQUE, NEW MEXICO 87109
(505) 858-3100
www.tierrawestllc.com

NEW MEXICO ENERGY MINERAL AND NATURAL RESOURCE
ABANDONED MINE LAND PROGRAM

TITLE:
MADRID WATER - FIRE SUPPRESSION IMPROVEMENTS
STA 19+50 TO STA 21+75

LAST DESIGN UPDATE | MO./DAY/YR. | MO./DAY/YR.

TIERRA WEST, LLC
5571 Midway Park Place NE
Albuquerque, NM 87109
Phone: 505-858-3100
Fax: 505-858-1118

PROJECT NO.	ZONE MAP NO.	SHEET	OF
EMNRD-MMD-2025-01	–	5	16

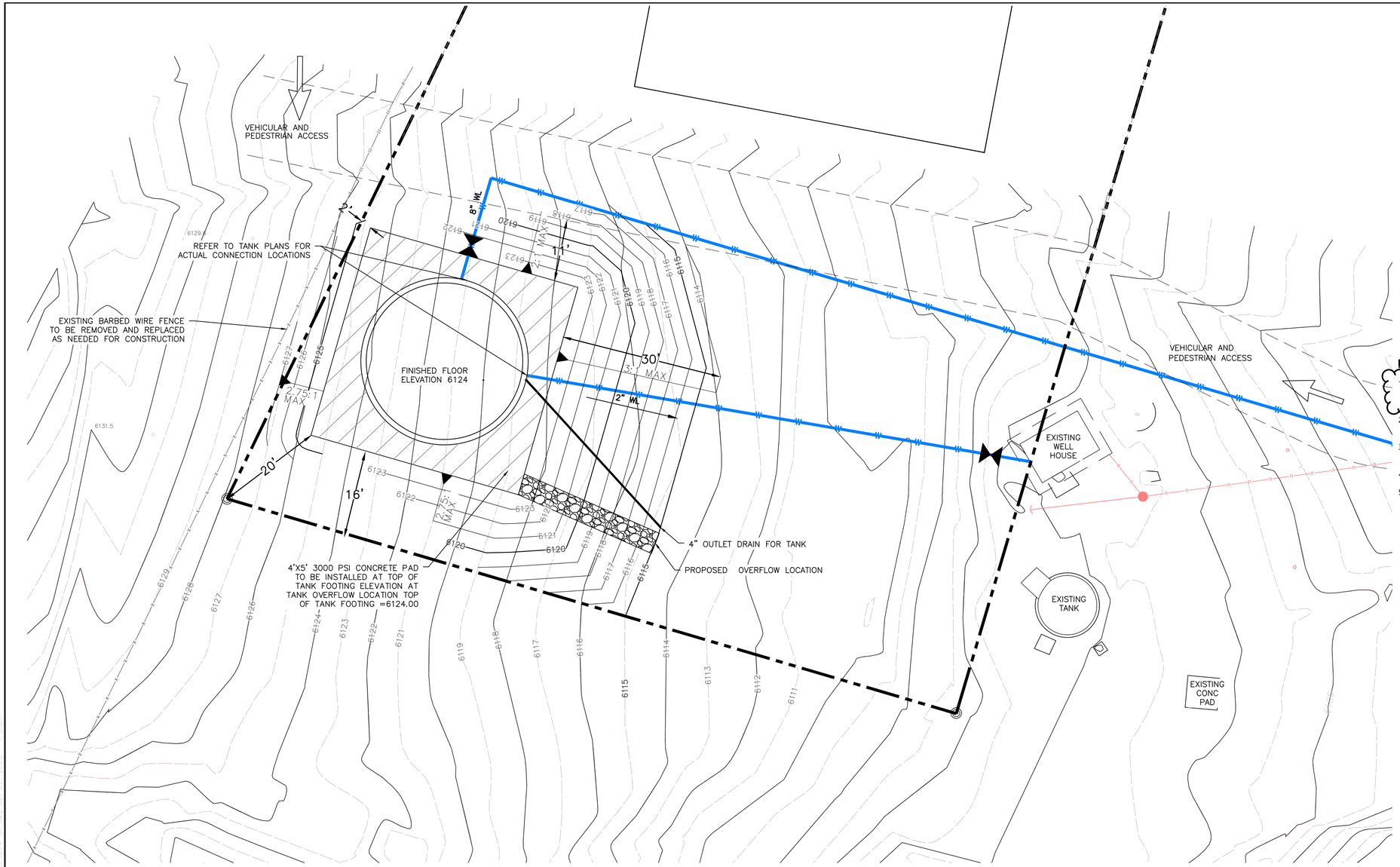

LEGEND

- BOUNDARY LINE
- EASEMENT
- CENTERLINE
- RIGHT–OF–WAY
- BUILDING
- 5010 CONTOUR MAJOR
- 5011 CONTOUR MINOR
- x 5048.25 SPOT ELEVATION
- FLOW ARROW
- PROPOSED 8" WATERLINE
- 5010 EXISTING CONTOUR MAJOR
- 5011 EXISTING CONTOUR MINOR
- 5048.25 EXISTING SPOT ELEVATION

1

NOTES

1. 3" TO 4" FRACTURED ROCK 8"-12" DEEP SHALL BE PLACED OVER MIRAFI FABRIC ON SLOPES 3:1 OR STEEPER. MIRAFI FABRIC TO BE PLACED WITH LANDSCAPE STAPLE AT 5' ON CENTER EACH WAY.
2. EXISTING ACCESS ROADWAY TO BE STABILIZED WITH 4" GRAVEL SURFACE.
3. HYDROLOGY CALCULATIONS HAVE BEEN PROVIDED WITH SITE DEVELOPMENT PLAN REPORT.
4. SOILS UNDER TANK PAD MUST BE PH CORRECTIVE SOIL.
5. BACKFILL FOR DUCTILE IRON PIPE MUST BE PH CORRECTIVE SOIL.

N

GRAPHIC SCALE

10 0 5 10

(IN FEET)
1 inch = 10 ft.

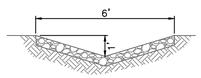

OVERFLOW SWALE

NOTICE TO CONTRACTORS

1. NMDOT UTILITY PERMIT WILL BE REQUIRED BEFORE BEGINNING ANY WORK WITHIN CITY RIGHT-OF-WAY.
2. ALL WORK DETAILED ON THESE PLANS TO BE PERFORMED, EXCEPT AS OTHERWISE STATED OR PROVIDED HERON, SHALL BE CONSTRUCTED IN ACCORDANCE WITH SANTA FE COUNTY SUSTAINABLE LAND DEVELOPMENT CODE SECTION 7.17.
3. TWO WORKING DAYS PRIOR TO ANY EXCAVATION, THE CONTRACTOR MUST CONTACT NEW MEXICO ONE CALL, DIAL "811" [OR (505) 260-1990] FOR THE LOCATION OF EXISTING UTILITIES.
4. PRIOR TO CONSTRUCTION, THE CONTRACTOR SHALL EXCAVATE AND VERIFY THE HORIZONTAL AND VERTICAL LOCATIONS OF ALL CONNECTIONS. SHOULD A CONFLICT EXIST, THE CONTRACTOR SHALL NOTIFY THE ENGINEER SO THAT THE CONFLICT CAN BE RESOLVED WITH A MINIMUM AMOUNT OF DELAY.
5. BACKFILL COMPACTION OF THE TANK FOUNDATION SHALL BE ACCORDING TO TANK MANUFACTURER'S DESIGN SPECIFICITIONS AND REQUIREMENTS.
6. OVEREXCAVATION OF THE TANK FOUNDATION AND DEPTH OF SELECT FILL WILL BE PER GEOTECHNICAL REPORT AND STRUCTURAL DESIGN PLANS.
7. MAINTENANCE OF THESE FACILITIES SHALL BE THE RESPONSIBILITY OF THE OWNER OF THE PROPERTY SERVED.

CAUTION

ALL EXISTING UTILITIES SHOWN WERE OBTAINED FROM RESEARCH, AS–BUILTS, SURVEYS OR INFORMATION PROVIDED BY OTHERS. IT SHALL BE THE SOLE RESPONSIBILITY OF THE CONTRACTOR TO CONDUCT ALL NECESSARY FIELD INVESTIGATIONS PRIOR TO AND INCLUDING ANY EXCAVATION, TO DETERMINE THE ACTUAL LOCATION OF UTILITIES AND OTHER IMPROVEMENTS, PRIOR TO STARTING THE WORK. ANY CHANGES FROM THIS PLAN SHALL BE COORDINATED WITH AND APPROVED BY THE ENGINEER.

AS BUILT INFORMATION

CONTRACTOR		
WORK STAKED BY		DATE
INSPECTED BY		
ACCEPTANCE BY		DATE
FIELD VERIFICATION BY		DATE
DRAWINGS CORRECTED BY		DATE

MICRO–FILM INFORMATION

RECORDED BY	
DATE	
NO.	

BENCH MARKS

SURVEY INFORMATION

FIELD NOTES

NO.	BY	DATE

ENGINEER'S SEAL

RONALD R. BOHANNAN
NEW MEXICO
7868
PROFESSIONAL ENGINEER

01/17/25

REVISIONS

NO.	DATE	REMARKS	BY
1	1/21/25	Added clarification note	

DESIGN

DESIGNED BY: JN — DATE: JANUARY 2025
DRAWN BY: RMG — DATE: JANUARY 2025
DRAWN NAME: MADRID WATER TANK IMPROVEMENTS — JOB NO.: 2023094
CHECKED BY: RRB — DATE: JANUARY 2025

TIERRA WEST, LLC
5571 MIDWAY PARK PLACE NE
ALBUQUERQUE, NEW MEXICO 87109
(505) 858–3100
www.tierrawestllc.com

NEW MEXICO ENERGY MINERAL AND NATURAL RESOURCE
ABANDONED MINE LAND PROGRAM

TITLE:
MADRID WATER – FIRE SUPPRESSION IMPROVEMENTS
GRADING AND DRAINAGE

LAST DESIGN UPDATE

MO./DAY/YR.	MO./DAY/YR.

TIERRA WEST, LLC
5571 Midway Park Place NE
Albuquerque, NM 87109
Phone: 505-858-3100
Fax: 505-858-1118

PROJECT NO.	ZONE MAP NO.	SHEET	OF
EMNRD–MMD–2025–01	–	6	16

2025-01-21 Madrid Stormwater & Erosion Control Plans-Water Improvements.dwg Jan 21, 2025 - 1:50pm

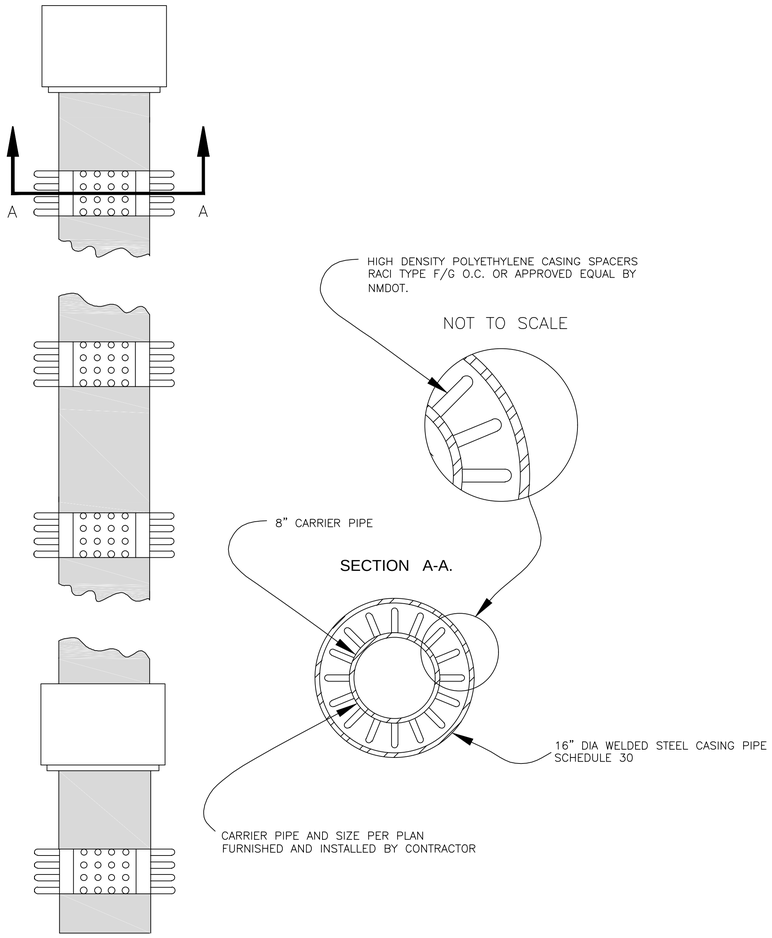

CASING DETAIL
NTS

THE FOLLOWING TABLES WERE CREATED USING EBAA IRON INC. SOFTWARE FOR RESTRAINING JOINTS WITH THESE CRITERIA:

DEPTH OF BURY: 3.0' MINIMUM
SAFETY FACTOR: 1.5 TO 1
PIPE MATERIAL: PVC
SOIL TYPE: GM/SM-SILTY GRAVEL/SILTY SAND, GRAVEL-SAND MIXTURES
TEST PRESSURE: 150 PSI
TRENCH TYPE 3: PIPE BEDDED IN 4" MINIMUM LOOSE SOIL BACKFILL LIGHTLY CONSOLIDATED TO TOP OF PIPE

THESE LENGTHS WILL BE AFFECTED IF THE TYPE OF MATERIAL, GREATER DEPTH OF BURY, ETC. CHANGES. THESE MUST BE RECALCULATED BY THE DESIGN ENGINEER PRIOR TO CONSTRUCTION.

RESTRAINED JOINT LENGTHS FOR TEES*

SIZE	LENGTH ALONG RUN**					
	10'	8'	6'	4'	2'	0'
12x12x12	61	68	76	83	90	98
12x12x10	39	48	56	65	74	83
12x12x8	15	26	37	48	59	70
12x12x6	1	1	9	24	38	53
12x12x4	1	1	1	1	16	37
10x10x10	46	54	61	68	76	83
10x10x8	25	34	43	52	61	70
10x10x6	1	5	17	29	41	53
10x10x4	1	1	1	2	20	37
8x8x8	34	42	49	56	63	70
8x8x6	6	15	25	34	43	53
8x8x4	1	1	1	10	24	37
6x6x6	7	24	31	39	46	53
6x6x4	1	1	6	17	27	37

*RESTRAINTS ONLY PLACED ON THE BRANCH
**LENGTH ALONG RUN REFERS TO THE LENGTH OF PIPE ON EITHER SIDE OF THE TEE BEFORE THE NEXT JOINT.

RESTRAINED JOINT LENGTHS FOR HORIZONTAL BENDS, VALVES, AND DEAD ENDS (EACH SIDE)

SIZE	HORIZONTAL BENDS				VALVES
	90°	45°	22-1/2°	11-1/4°	DEAD END
12	45	19	9	4	102
10	38	16	8	4	86
8	32	13	6	3	72
6	25	10	5	2	55
4	18	7	4	1	39

RESTRAINED JOINT LENGTHS FOR REDUCERS***

SIZE	L. SIDE	SIZE	L. SIDE
12x10	50	10x6	53
12x8	54	10x4	70
12x6	74	8x6	30
12x4	88	8x4	52
10x8	29	6x4	28

***RESTRAINTS ONLY PLACED ON LARGE SIDE

THE FOLLOWING TABLES WERE CREATED USING EBAA IRON INC. SOFTWARE FOR RESTRAINING JOINTS WITH THESE CRITERIA:

DEPTH OF BURY: 3.0' MINIMUM TO 6.0'
SAFETY FACTOR: 1.5 TO 1
PIPE MATERIAL: PVC
SOIL TYPE: GM/SM-SILTY GRAVEL/SILTY SAND, GRAVEL-SAND MIXTURES
TEST PRESSURE: 150 PSI
TRENCH TYPE 3: PIPE BEDDED IN 4" MINIMUM LOOSE SOIL BACKFILL LIGHTLY CONSOLIDATED TO TOP OF PIPE

THESE LENGTHS WILL BE AFFECTED IF THE TYPE OF MATERIAL, GREATER DEPTH OF BURY, ETC. CHANGES. THESE MUST BE RECALCULATED BY THE DESIGN ENGINEER PRIOR TO CONSTRUCTION.

RESTRAINED JOINT LENGTHS FOR VERTICAL OFFSETS/BENDS (EACH SIDE)

SIZE	HORIZONTAL BENDS			
	90°	45°	22-1/2°	11-1/4°
12 UPPER	DON'T USE	42	20	10
LOWER		10	5	2
10 UPPER	DON'T USE	36	17	8
LOWER		8	4	2
8 UPPER	DON'T USE	30	14	7
LOWER		7	3	2
6 UPPER	DON'T USE	23	11	5
LOWER		5	3	1
4 UPPER	DON'T USE	16	8	4
LOWER		4	2	1

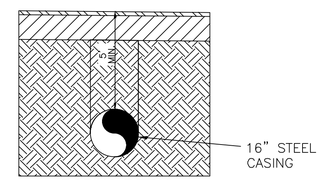

BORING DETAIL
NTS

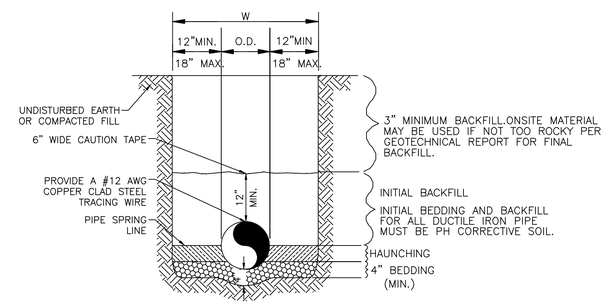

TRENCH DETAIL
GENERAL NOTES

1. BEDDING SHALL BE CLASS I-A WORKED BY HAND. IF GROUNDWATER IS ANTICIPATED, THEN BEDDING SHALL BE CLASS I-B COMPACTED TO 85% STANDARD PROCTOR. (SEE SPECIFICATIONS FOR GRADATION)
2. HAUNCHING SHALL BE WORKED AROUND THE PIPE BY HAND TO ELIMINATE VOIDS AND SHALL BE CLASS I-A OR CLASS I-B OR CLASS II COMPACTED TO 85% PROCTOR.
3. INITIAL BACKFILL SHALL BE CLASS I-A WORKED BY HAND, OR CLASS I-B OR CLASS II COMPACTED TO 85% STANDARD PROCTOR.
4. INITIAL BACKFILL NOT UNDER PAVED AREAS OR ALONG NM14 CAN BE COMPACTED TO 90% STANDARD PROCTOR OR OTHERWISE MUST BE COMPACTED TO 95% PROCTOR PER NMDOT SPECIFICATION.
5. FINAL BACKFILL SHALL BE CLASS I, OR II COMPACTED AS NOTED IN NOTES 3. AND 4.
6. FINAL BACKFILL NOT UNDER PAVED AREAS CAN BE TYPE II COMPACTED TO 95% STANDARD PROCTOR PER NMDOT SPECIFICATION
7. ALL MATERIALS ARE CLASSIFIED IN ACCORDANCE WITH ASTM D 2321-89.
8. ALL MATERIALS SHALL BE INSTALLED IN MAXIMUM 8" LOOSE LIFTS IN ACCORDANCE WITH ASTM D 698.
9. FILL SALVAGED FROM EXCAVATION SHALL BE FREE OF DEBRIS, ORGANICS AND ROCKS LARGER THAN 3".
10. ALL TRENCH EXCAVATIONS SHALL BE SLOPED, SHORED, SHEETED, BRACED, OR OTHERWISE SUPPORTED IN COMPLIANCE WITH OSHA REGULATIONS AND LOCAL ORDINANCES. (SEE SPECIFICATIONS)
11. REFER TO NMDOT DETAIL 206-10-1/1 FOR AGENCY SPECIFIC STANDARDS

UTILITY TRENCH AND BEDDING DETAIL
NTS

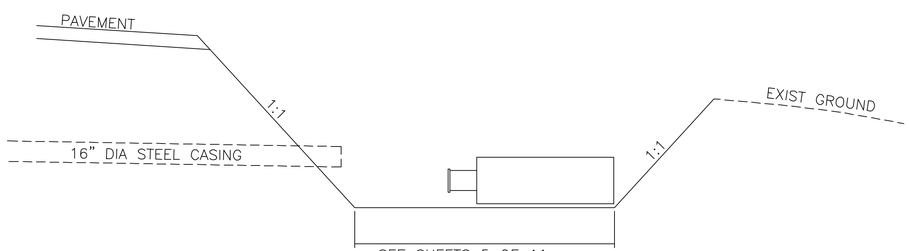

BORE PIT DETAIL
NTS

AS BUILT INFORMATION
CONTRACTOR
WORK STAKED BY DATE
INSPECTOR'S ACCEPTANCE DATE
FIELD VERIFICATION BY DATE
DRAWINGS CORRECTED BY DATE
MICRO-FILM INFORMATION
RECORDED BY DATE
NO.

BENCH MARKS

SURVEY INFORMATION
FIELD NOTES
NO. BY DATE

ENGINEER'S SEAL
RONALD R. BOHANNAN
NEW MEXICO
7868
PROFESSIONAL ENGINEER
06/26/24

NO.	DATE	REMARKS	BY

REVISIONS

DESIGN
DESIGNED BY: JN DATE: JUNE 2024
DRAWN BY: RMG DATE: JUNE 2024
DRAWN NAME: MADRID WATER TANK IMPROVEMENTS JOB NO.: 2023094
CHECKED BY: RRB DATE: JUNE 2024

TIERRA WEST, LLC
5571 MIDWAY PARK PLACE NE
ALBUQUERQUE, NEW MEXICO 87109
(505) 858-3100
www.tierrawestllc.com

NEW MEXICO ENERGY MINERAL AND NATURAL RESOURCE
ABANDONED MINE LAND PROGRAM

TITLE:
MADRID WATER - FIRE SUPPRESSION IMPROVEMENTS
CONSTRUCTION DETAILS

LAST DESIGN UPDATE MO./DAY/YR. MO./DAY/YR.

TIERRA WEST, LLC
5571 Midway Park Place NE
Albuquerque, NM 87109
Phone: 505-858-3100
Fax: 505-858-1118

PROJECT NO. EMNRD-MMD-2025-01
ZONE MAP NO. –
SHEET 7 OF 16

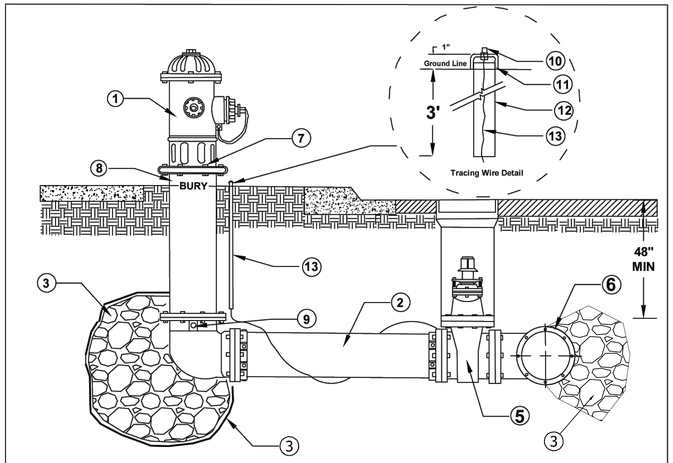

NOT TO SCALE

#	DESCRIPTION	#	DESCRIPTION
1	FIRE HYDRANT	8	2" MINIMUM 4" MAXIMUM GAP FROM FINISH GRADE TO BREAK AWAY JOINT
2	6" MINIMUM DUCTILE IRON PIPE*	9	DRAIN (DO NOT BLOCK)
3	CONCRETE THRUSTING BLOCK PER TABLE THIS SHEET	10	NUT AND BOLT WITH WIRE SECURED BY SILVER SOLDER
4		11	GLUED PVC CAP
5	6" MINIMUM GATE VALVE	12	3/4" PVC
6	6" MINIMUM MECHANICAL JOINT TEE FITTING	13	#10 TRACING WIRE
7	BREAK-AWAY CONNECTION	*	ALL BURRIED DUCTILE IRON SHALL HAVE CATHODIC PROTECTION

SANTA FE COUNTY UTILITIES
STANDARD DETAILS

FIRE HYDRANT

DATE: 3/2021

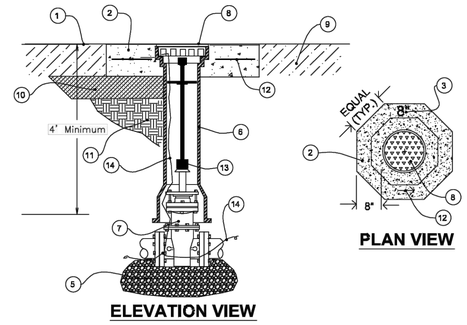

ELEVATION VIEW

PLAN VIEW

NOT TO SCALE

#	DESCRIPTION	#	DESCRIPTION
1	FINISH STREET GRADE	8	VALVE BOX LID
2	8" MIN DEPTH - 3000 PSI CONCRETE PAD	9	PAVEMENT
3	STAMPED LINE SIZE (2 SIZES IF REDUCING)	10	SUBGRADE
4	STAMPED ARROW INDICATING ISOLATION DIRECTION(?)	11	COMPACTED BACKFILL
5	98% COMPACTED BACK FILL 12" MINIMUM DEPTH	12	#4 REBAR
6	5-1/4 SCREWTYPE ADJUSTABLE VALVE BOX	13	EXTENSION BAR IF NECESSARY
7	GATE VALVE	14	#12 TRACING WIRE

SANTA FE COUNTY UTILITIES
STANDARD DETAILS

VALVE & VALVE BOX INSTALLATION

DATE: 10/15/2020

PIPE SIZE	ELBOW ANGLE	ELBOW (B) DIM.	ELBOW (H) DIM.	TEE OR PLUG (B) DIM.	TEE OR PLUG (H) DIM.
4"	90°,45°	2'	2'	2'	2'
4"	22.5°,11.25°	2'	2'		
6"	90°,45°	2'	2'	2'	2'
6"	22.5°,11.25°	2'	2'		
8"	90°	3'	3'	3'	3'
8"	45°	2'	2'		
8"	22.5°,11.25°	2'	2'		
10"	90°	3'-6"	3'-6"	3'	3'
10"	45°	3'	3'		
10"	22.5°,11.25°	2'	2'		
12"	90°	4'	4'	3'-6"	3'-6"
12"	45°	3'-6"	3'-6"		
12"	22.5°,11.25°	2'	2'		
14"	90°	5'	5'	4'	4'
14"	45°	3'-6"	3'-6"		
14"	22.5°,11.25°	3'	3'		

CONSTRUCTION NOTE:
A. UNIDISTURBED EARTH
B. O.D. OF PIPE +6"
C. O.D. OF CAP OR PLUG, MIN. 12"x12"

CONCRETE BLOCKING DESIGN
NTS PER COA STD DWG #2320

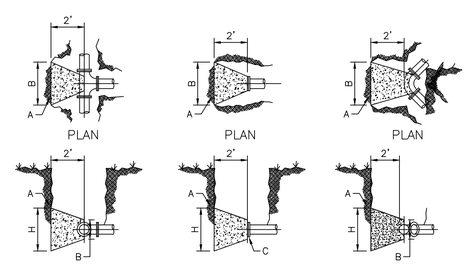

ELEVATION CONCRETE BLOCKING FOR TEE

ELEVATION CONCRETE BLOCKING FOR PLUG OR CAP

ELEVATION CONCRETE BLOCKING FOR ELBOW

AS BUILT INFORMATION
CONTRACTOR
WORK STAKED BY — DATE
INSPECTOR'S ACCEPTANCE — DATE
FIELD VERIFICATION BY — DATE
DRAWINGS CORRECTED BY — DATE
MICRO-FILM INFORMATION
RECORDED BY — DATE
NO.

BENCH MARKS

SURVEY INFORMATION
FIELD NOTES
NO. | BY | DATE

ENGINEER'S SEAL
RONALD R. BOHANNAN
NEW MEXICO
7868
PROFESSIONAL ENGINEER
06/26/24

NO.	DATE	REMARKS	BY

REVISIONS

DESIGN
DESIGNED BY: JN — DATE: JUNE 2024
DRAWN BY: RMG — DATE: JUNE 2024
DRAWN NAME: MADRID WATER TANK IMPROVEMENTS — JOB NO.: 2023094
CHECKED BY: RRB — DATE: JUNE 2024

TIERRA WEST, LLC
5571 MIDWAY PARK PLACE NE
ALBUQUERQUE, NEW MEXICO 87109
(505) 858-3100
www.tierrawestllc.com

NEW MEXICO ENERGY MINERAL AND NATURAL RESOURCE
ABANDONED MINE LAND PROGRAM

TITLE:
MADRID WATER - FIRE SUPPRESSION IMPROVEMENTS
CONSTRUCTION DETAILS

LAST DESIGN UPDATE | MO./DAY/YR. | MO./DAY/YR.

TIERRA WEST, LLC
5571 Midway Park Place NE
Albuquerque, NM 87109
Phone: 505-858-3100
Fax: 505-858-1118

PROJECT NO. EMNRD-MMD-2025-01 | ZONE MAP NO. – | SHEET 8 OF 16

NOTES:

1. TANK ACCESSORIES HAVE BEEN ROTATED INTO THE PLANE OF PROJECTION. SEE UTILITY PLAN FOR ACTUAL ORIENTATION.
2. DETAILS SHOWN REFLECT A BOLTED STEEL TANK TO CONFORM TO ANSI/AWWA SPECIFICATION D-103 W/LATEST REVISIONS. COATING SHOULD BE APPLIED PER SECTION D103-97.
3. TANK WILL BE CONNECTED TO SCADA SYSTEM VIA CONDUIT THAT WILL CONNECT AT THE SAME LOCATION AS THE INLET PIPE. TANK SHOULD BE COMPLIANT WITH LATEST SCADA REQUIREMENTS.
4. MANUFACTURER TO PROVIDE A TANK WITH EQUIVALENT OR GREATER SPECIFICATIONS THAN THOSE INDICATED ON THIS SHEET.
5. TANK TO BE SET UP WITH A MANUAL FILL CONTROL.
6. SOIL UNDER TANK MUST BE PH CORRECTIVE SOIL.
7. TANK INSULATION OR A HEATER MUST BE PART OF THE TANK DESIGN TO PREVENT FREEZING.
8. TANK TO PAINTED DESERT TAN TO MATCH EXISTING WATER TANK.
9. EXTERIOR LADDER MUST BE ACCOMPANIED WITH A LADDER SAFETY SYSTEM OR A PERSONAL FALL ARREST SYSTEM PER OSHA 1910.28(b)(i)(B).

1

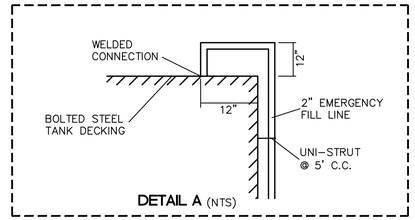

DETAIL A (NTS)

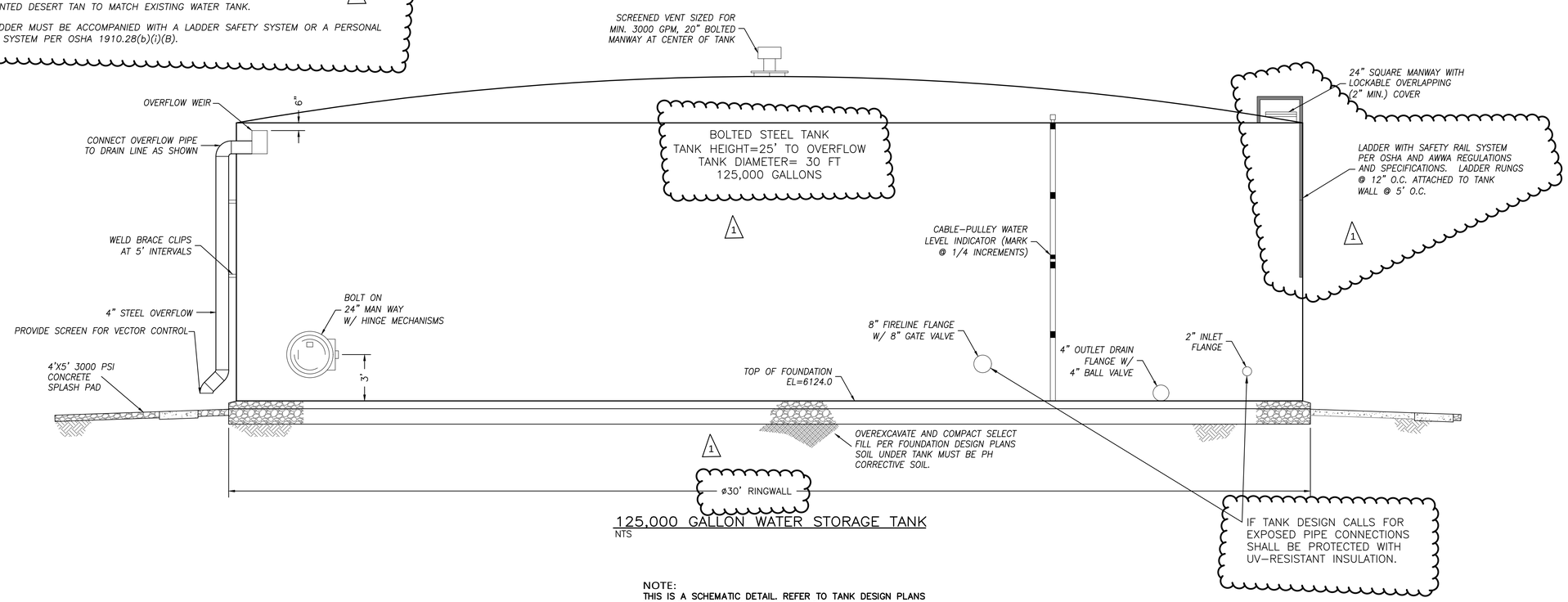

125,000 GALLON WATER STORAGE TANK
NTS

NOTE:
THIS IS A SCHEMATIC DETAIL. REFER TO TANK DESIGN PLANS FOR ACTUAL LOCATIONS OF OPENINGS.

AS BUILT INFORMATION

CONTRACTOR	
WORK STAKED BY	DATE
INSPECTOR'S ACCEPTANCE BY	DATE
FIELD VERIFICATION BY	DATE
DRAWINGS CORRECTED BY	DATE
MICRO-FILM INFORMATION	
RECORDED BY	DATE
NO.	

BENCH MARKS

SURVEY INFORMATION

FIELD NOTES

NO.	BY	DATE

ENGINEER'S SEAL

RONALD R. BOHANNAN
NEW MEXICO
7868
PROFESSIONAL ENGINEER

01/17/25

REVISIONS

NO.	DATE	REMARKS	BY
1	1/21/25	Updated dimensions, added clarification notes	

DESIGN

DESIGNED BY: JN — DATE: JANUARY 2025
DRAWN BY: RMG — DATE: JANUARY 2025
DRAWN NAME: MADRID WATER TANK IMPROVEMENTS — JOB NO.: 2023094
CHECKED BY: RRB — DATE: JANUARY 2025

TIERRA WEST, LLC
5571 MIDWAY PARK PLACE NE
ALBUQUERQUE, NEW MEXICO 87109
(505) 858-3100
www.tierrawestllc.com

NEW MEXICO ENERGY MINERAL AND NATURAL RESOURCE
ABANDONED MINE LAND PROGRAM

TITLE:
MADRID WATER - FIRE SUPPRESSION IMPROVEMENTS
WATER STORAGE TANK SPECIFICATIONS

LAST DESIGN UPDATE

MO./DAY/YR.	MO./DAY/YR.

TIERRA WEST, LLC
5571 Midway Park Place NE
Albuquerque, NM 87109
Phone: 505-858-3100
Fax: 505-858-1118

PROJECT NO.	ZONE MAP NO.	SHEET	OF
EMNRD-MMD-2025-01	–	9	16

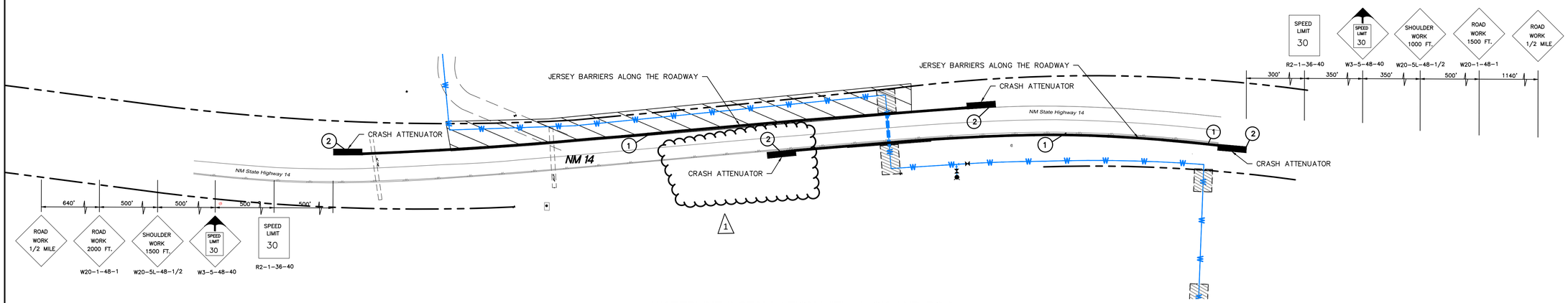

NOTE: ANY EXISTING SPEED LIMIT SIGNS ARE TO BE COVERED DURING CONSTRUCTION IN THE RIGHT-OF-WAY.

WATERLINE INSTALLATION WITH JACK AND BORE

KEYED NOTES

1. CONCRETE WALL BARRIER TYPE 42 PER NMDOT STANDARD DETAIL 606-17.
2. SLED TL-2 TRAFFIC ATTENUATOR END TREATMENT OR EQUIVALENT.

TRAFFIC CONTROL MANAGEMENT

THE CONTRACTOR SHALL BE REQUIRED TO SUBMIT AND OBTAIN APPROVAL OF A TRAFFIC CONTROL PERMIT PRIOR TO COMMENCING ANY CONSTRUCTION ACTIVITIES ON THE ROADWAY. ALONG WITH THE PERMIT, THE CONTRACTOR WILL BE REQUIRED TO SUBMIT A TRAFFIC CONTROL PLAN THAT WILL REFLECT AND COORDINATE THE CONTRACTOR'S PROPOSED CONSTRUCTION PHASING. THESE PLANS SHALL BE PREPARED AND SEALED BY A NEW MEXICO REGISTERED PROFESSIONAL ENGINEER. THE PLANS SHALL BE REVIEWED AND APPROVED BY THE DISTRICT THREE TRAFFIC ENGINEER OR DESIGNEE. THE NMDOT DISTRICT TRAFFIC SECTION RESERVES THE RIGHT TO MAKE ANY CHANGES TO THE TRAFFIC CONTROL PLAN TO ADDRESS SITE SPECIFIC ITEMS THAT WERE NOT SHOWN ON THE PLANS. THE NMDOT ALSO RESERVES THE RIGHT TO ADD TRAFFIC CONTROL DEVICES TO THE APPROVED PLAN IF IT IS DETERMINED BY THE TRAFFIC ENGINEER OR DESIGNEE THAT THE ADDITIONAL DEVICES WOULD BE REQUIRED TO ADDRESS SAFETY CONCERNS WITHIN OR IN ADVANCE OF THE WORK ZONE. THE TRAFFIC CONTROL PERMIT ALONG WITH THE TRAFFIC CONTROL PLANS SHALL BE SUBMITTED TO THE NMDOT DISTRICT THREE, ISRAEL SUAZO (505-382-8786) AT LEAST 10 WORKING DAYS PRIOR TO CONSTRUCTION. THE TRAFFIC CONTROL PLANS SHALL BE SUBMITTED ELECTRONICALLY OR ON 11X17 SHEETS. A COPY OF THE TRAFFIC CONTROL PERMIT (RIGHT-OF-WAY FORMS) MAY BE OBTAINED FROM OUR OFFICE.

NTS

AS BUILT INFORMATION
CONTRACTOR
WORK STAKED BY DATE
INSPECTOR'S ACCEPTANCE DATE
ACCEPTANCE BY DATE
FIELD VERIFICATION BY DATE
DRAWINGS CORRECTED BY DATE
MICRO-FILM INFORMATION
RECORDED BY DATE
NO.

BENCH MARKS

SURVEY INFORMATION
FIELD NOTES
NO. BY DATE

ENGINEER'S SEAL
RONALD R. BOHANNAN
NEW MEXICO
7868
PROFESSIONAL ENGINEER
01/17/25

NO.	DATE	REMARKS	BY
1	1/21/25	Deleted Stray notes	

REVISIONS

DESIGN
DESIGNED BY: JN — DATE: JANUARY 2025
DRAWN BY: RMG — DATE: JANUARY 2025
DRAWN NAME: MADRID WATER TANK IMPROVEMENTS — JOB NO.: 2023094
CHECKED BY: RRB — DATE: JANUARY 2025

TIERRA WEST, LLC
5571 MIDWAY PARK PLACE NE
ALBUQUERQUE, NEW MEXICO 87109
(505) 858-3100
www.tierrawestllc.com

NEW MEXICO ENERGY MINERAL AND NATURAL RESOURCE ABANDONED MINE LAND PROGRAM

TITLE:
MADRID WATER - FIRE SUPPRESSION IMPROVEMENTS TRAFFIC CONTROL PLAN

LAST DESIGN UPDATE — MO./DAY/YR. — MO./DAY/YR.

TIERRA WEST, LLC
5571 Midway Park Place NE
Albuquerque, NM 87109
Phone: 505-858-3100
Fax: 505-858-1118

PROJECT NO. EMNRD-MMD-2025-01 | ZONE MAP NO. – | SHEET 10 OF 16

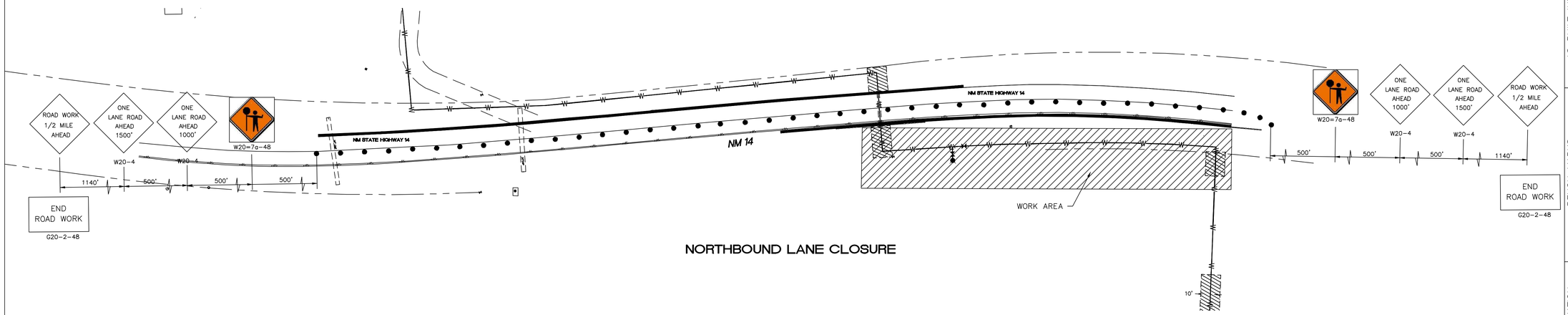

NORTHBOUND LANE CLOSURE

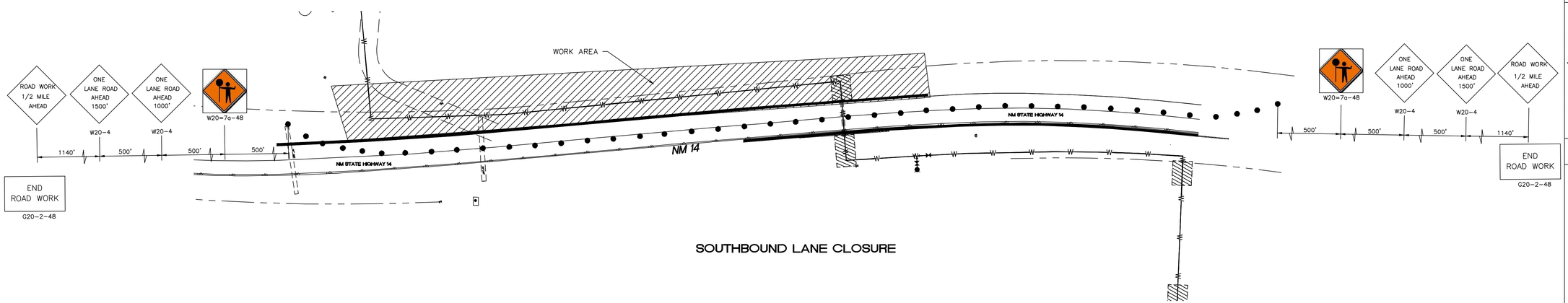

SOUTHBOUND LANE CLOSURE

NOTE: ANY EXISTING SPEED LIMIT SIGNS ARE TO BE COVERED DURING CONSTRUCTION IN THE RIGHT-OF-WAY.

TRAFFIC CONTROL MANAGEMENT

THE CONTRACTOR SHALL BE REQUIRED TO SUBMIT AND OBTAIN APPROVAL OF A TRAFFIC CONTROL PERMIT PRIOR TO COMMENCING ANY CONSTRUCTION ACTIVITIES ON THE ROADWAY. ALONG WITH THE PERMIT, THE CONTRACTOR WILL BE REQUIRED TO SUBMIT A TRAFFIC CONTROL PLAN THAT WILL REFLECT AND COORDINATE THE CONTRACTOR'S PROPOSED CONSTRUCTION PHASING. THESE PLANS SHALL BE PREPARED AND SEALED BY A NEW MEXICO REGISTERED PROFESSIONAL ENGINEER. THE PLANS SHALL BE REVIEWED AND APPROVED BY THE DISTRICT THREE TRAFFIC ENGINEER OR DESIGNEE. THE NMDOT DISTRICT TRAFFIC SECTION RESERVES THE RIGHT TO MAKE ANY CHANGES TO THE TRAFFIC CONTROL PLAN TO ADDRESS SITE SPECIFIC ITEMS THAT WERE NOT SHOWN ON THE PLANS. THE NMDOT ALSO RESERVES THE RIGHT TO ADD TRAFFIC CONTROL DEVICES TO THE APPROVED PLAN IF IT IS DETERMINED BY THE TRAFFIC ENGINEER OR DESIGNEE THAT THE ADDITIONAL DEVICES WOULD BE REQUIRED TO ADDRESS SAFETY CONCERNS WITHIN OR IN ADVANCE OF THE WORK ZONE. THE TRAFFIC CONTROL PERMIT ALONG WITH THE TRAFFIC CONTROL PLANS SHALL BE SUBMITTED TO THE NMDOT DISTRICT THREE, ISRAEL SUAZO (505-382-8786) AT LEAST 10 WORKING DAYS PRIOR TO CONSTRUCTION. THE TRAFFIC CONTROL PLANS SHALL BE SUBMITTED ELECTRONICALLY OR ON 11X17 SHEETS. A COPY OF THE TRAFFIC CONTROL PERMIT (RIGHT-OF-WAY FORMS) MAY BE OBTAINED FROM OUR OFFICE.

NTS

AS BUILT INFORMATION

CONTRACTOR	DATE
WORK STAKED BY	DATE
INSPECTOR ACCEPTANCE BY	DATE
FIELD VERIFICATION BY	DATE
DRAWINGS CORRECTED BY	DATE

MICRO-FILM INFORMATION

RECORDED BY	DATE
NO.	

BENCH MARKS

SURVEY INFORMATION

FIELD NOTES

NO.	BY	DATE

ENGINEER'S SEAL

RONALD R. BOHANNAN
NEW MEXICO
7868
PROFESSIONAL ENGINEER

06/26/24

NO.	DATE	REMARKS	BY

REVISIONS

DESIGN

DESIGNED BY: JN — DATE: JUNE 2024
DRAWN BY: RMG — DATE: JUNE 2024
DRAWN NAME: MADRID WATER TANK IMPROVEMENTS — JOB NO.: 2023094
CHECKED BY: RRB — DATE: JUNE 2024

TIERRA WEST, LLC
5571 MIDWAY PARK PLACE NE
ALBUQUERQUE, NEW MEXICO 87109
(505) 858-3100
www.tierrawestllc.com

NEW MEXICO ENERGY MINERAL AND NATURAL RESOURCE
ABANDONED MINE LAND PROGRAM

TITLE:

MADRID WATER - FIRE SUPPRESSION IMPROVEMENTS TRAFFIC CONTROL PLAN

LAST DESIGN UPDATE	MO./DAY/YR.	MO./DAY/YR.

TIERRA WEST, LLC
5571 Midway Park Place NE
Albuquerque, NM 87109
Phone: 505-858-3100
Fax: 505-858-1118

PROJECT NO.	ZONE MAP NO.	SHEET	OF
EMNRD-MMD-2025-01	–	11	16

TAPER REQUIREMENTS

SPEED LIMIT (MPH)	TAPER LENGTH (FEET)			MAXIMUM DISTANCE BETWEEN DEVICES (FEET)	MINIMUM NUMBER OF DEVICES REQUIRED
	10' LANE	11' LANE	12' LANE		
25	104	115	125	25	6
30	150	165	185	30	7
35	204	225	245	35	8
40	267	293	320	40	9
45	450	495	540	45	13
50	500	550	600	50	13
55	550	605	660	55	13

RECOMMENDED SIGN SPACING (D) FOR ADVANCE WARNING SIGN SERIES

SPEED MILES PER HOUR	MINIMUM DISTANCE IN FEET BETWEEN SIGNS	FROM LAST SIGN TO TAPER
0–20	10 X SPEED LIMIT	10 X SPEED LIMIT
25–30	10 X SPEED LIMIT	10 X SPEED LIMIT
30–35	10 X SPEED LIMIT	10 X SPEED LIMIT
35–40	10 X SPEED LIMIT	10 X SPEED LIMIT
40–45	10 X SPEED LIMIT	10 X SPEED LIMIT
50–60	10 X SPEED LIMIT	10 X SPEED LIMIT

LEGEND

- WORK AREA
- B 2 — TRAFFIC SIGN & QUANTITY (SEE THIS SHEET FOR DESIGNATION)
- BARRICADE – TYPE I, TYPE II, OR BARREL
- BARRICADE – TYPE III
- X — VERTICAL PANEL
- WARNING SIGN
- L — DISTANCE BETWEEN SIGNS–A DISTANCE MEASURED IN FEET EQUAL TO A VALUE OF TEN TIMES THE SPEED LIMIT OF THE STREET
- FLAGMAN POSITION
- S — SPACING BETWEEN BARRICADES–A DISTANCE MEASURED IN FEET EQUAL TO THE SPEED LIMIT OF THE STREET

TAPER LENGTH – ON CHART

TANGENT LENGTH – IS EQUAL TO THE TAPER LENGTH FOR A GIVEN STREET

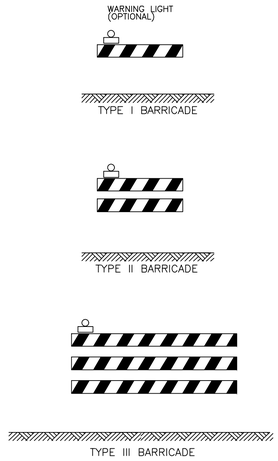

NOTE: FLASHING OR STEADY BURN WARNING LIGHTS SHOULD BE USED ON BARRICADES, PANELS, AND DRUMS AS NEEDED.

TAPER CRITERIA

TYPE OF TAPER	TAPER LENGTH
UPSTREAM TAPER:	SEE CHART
MERGING TAPER:	L MINIMUM
SHIFTING TAPER:	1/2 L MINIMUM
SHOULDER TAPER:	1/2 L MINIMUM
TWO–WAY TRAFFIC TAPER:	100 FEET MAXIMUM
DOWNSTREAM TAPER:	100 FEET PER LANE

TAPER LENGTH COMPUTATION

SPEED LIMIT

45 MPH OR LESS: $L = \frac{WS^2}{60}$

45 MPH OR GRATER: $L = W \times S$

L = TAPER LENGTH
W = WIDTH OF OFFSET IN FEET
S = POSTED SPEED OR OFF–PEAK 85–PERCENTILE SPEED IN MPH

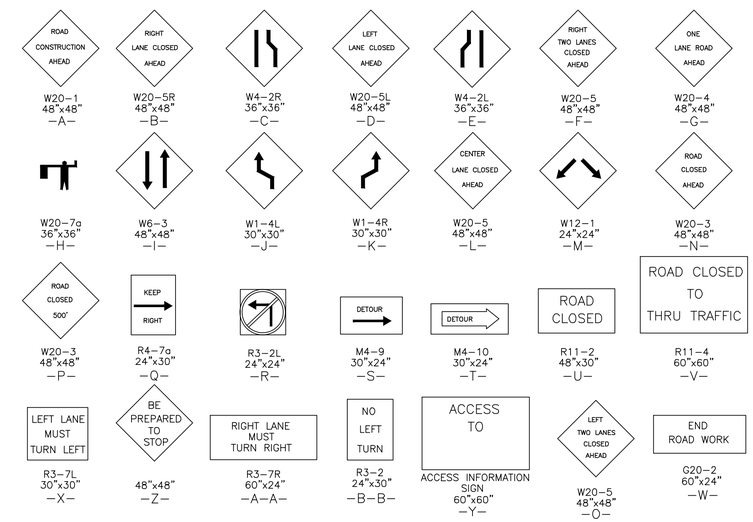

NOTE: ARROW DIRECTION TO BE ADJUSTED AS NEEDED.

NOTES

1. ALL ADVANCE WARNING SIGNS ARE TO BE DOUBLE INDICATED WHENEVER MEDIANS ARE PRESENT.
2. TRANSFORMATION FROM EXISTING SIGNALS TO SPAN WIRE IS TO OCCUR AT OFF PEAK HOURS.
3. THIS IS A STANDARD TRAFFIC CONTROL PLAN AND SOME TRAFFIC CONTROL SITUATIONS MAY BE SHOWN THAT ARE NOT REQUIRED ON THIS PARTICULAR PROJECT.

AS BUILT INFORMATION
CONTRACTOR
WORK STAKED BY — DATE
INSPECTOR'S ACCEPTANCE BY — DATE
FIELD VERIFICATION BY — DATE
DRAWINGS CORRECTED BY — DATE
MICRO–FILM INFORMATION
RECORDED BY — DATE
NO.

BENCH MARKS

SURVEY INFORMATION
FIELD NOTES
NO. | BY | DATE

ENGINEER'S SEAL
RONALD R. BOHANNAN
NEW MEXICO
7868
PROFESSIONAL ENGINEER
06/26/24

NO.	DATE	REMARKS	BY
		REVISIONS	

DESIGN
DESIGNED BY: JN — DATE: JUNE 2024
DRAWN BY: RMG — DATE: JUNE 2024
DRAWN NAME: MADRID WATER TANK IMPROVEMENTS — JOB NO.: 2023094
CHECKED BY: RRB — DATE: JUNE 2024

TIERRA WEST, LLC
5571 MIDWAY PARK PLACE NE
ALBUQUERQUE, NEW MEXICO 87109
(505) 858–3100
www.tierrawestllc.com

NEW MEXICO ENERGY MINERAL AND NATURAL RESOURCE
ABANDONED MINE LAND PROGRAM

TITLE:
MADRID WATER – FIRE SUPPRESSION IMPROVEMENTS
TRAFFIC CONTROL NOTES

LAST DESIGN UPDATE — MO./DAY/YR. — MO./DAY/YR.

TIERRA WEST, LLC
5571 Midway Park Place NE
Albuquerque, NM 87109
Phone: 505-858-3100
Fax: 505-858-1118

PROJECT NO. EMNRD–MMD–2025–01 | ZONE MAP NO. – | SHEET 12 OF 16

Z:\2023\2023094 Madrid Stormwater & Erosion Control Project\dwg\Construction\2023094–TC.dwg Sep 11, 2024 – 1:39pm

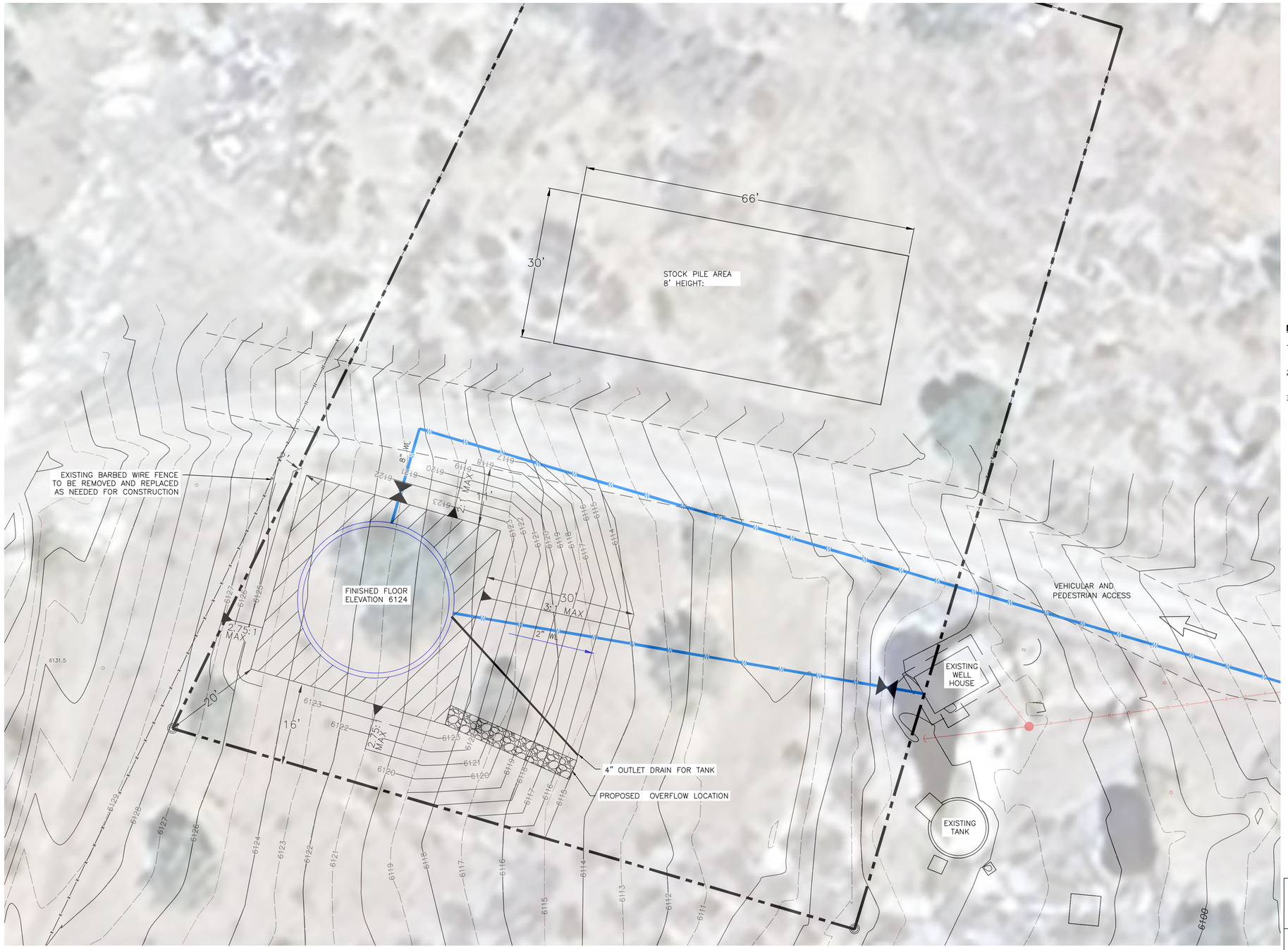

LEGEND

- BOUNDARY LINE
- EASEMENT
- CENTERLINE
- RIGHT–OF–WAY
- BUILDING
- 5010 CONTOUR MAJOR
- 5011 CONTOUR MINOR
- x 5048.25 SPOT ELEVATION
- FLOW ARROW
- PROPOSED 8" WATERLINE
- 5010 EXISTING CONTOUR MAJOR
- 5011 EXISTING CONTOUR MINOR
- • 5048.25 EXISTING SPOT ELEVATION

NOTES

1. 3" TO 4" FRACTURED ROCK OVER MIRAFI FABRIC. ON SLOPES 3:1 OR STEEPER.
2. EXISTING ACCESS ROADWAY TO BE STABILIZED WITH 4" GRAVEL SURFACE.
3. HYDROLOGY CALCULATIONS HAVE BEEN PROVIDED WITH SITE DEVELOPMENT PLAN REPORT.

GRAPHIC SCALE

10 0 5 10

(IN FEET)
1 inch = 10 ft.

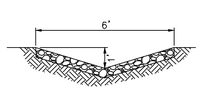

OVERFLOW SWALE

CAUTION

ALL EXISTING UTILITIES SHOWN WERE OBTAINED FROM RESEARCH, AS–BUILTS, SURVEYS OR INFORMATION PROVIDED BY OTHERS. IT SHALL BE THE SOLE RESPONSIBILITY OF THE CONTRACTOR TO CONDUCT ALL NECESSARY FIELD INVESTIGATIONS PRIOR TO AND INCLUDING ANY EXCAVATION, TO DETERMINE THE ACTUAL LOCATION OF UTILITIES AND OTHER IMPROVEMENTS, PRIOR TO STARTING THE WORK. ANY CHANGES FROM THIS PLAN SHALL BE COORDINATED WITH AND APPROVED BY THE ENGINEER.

TIERRA WEST, LLC
5571 Midway Park Place NE
Albuquerque, NM 87109
Phone: 505-858-3100
Fax: 505-858-1118

AS BUILT INFORMATION

CONTRACTOR		
WORK STAKED BY		DATE
INSPECTED BY		DATE
ACCEPTANCE BY		DATE
FIELD VERIFICATION BY		DATE
DRAWINGS CORRECTED BY		DATE

MICRO–FILM INFORMATION

RECORDED BY	DATE
NO.	

BENCH MARKS

SURVEY INFORMATION

FIELD NOTES

NO.	BY	DATE

ENGINEER'S SEAL

RONALD R. BOHANNAN
NEW MEXICO
7868
PROFESSIONAL ENGINEER

06/26/24

NO.	DATE	REMARKS	BY

REVISIONS

DESIGN

DESIGNED BY: JN	DATE: JUNE 2024
DRAWN BY: RMG	DATE: JUNE 2024
DRAWN NAME: MADRID WATER TANK IMPROVEMENTS	JOB NO.: 2023094
CHECKED BY: RRB	DATE: JUNE 2024

TIERRA WEST, LLC
5571 MIDWAY PARK PLACE NE
ALBUQUERQUE, NEW MEXICO 87109
(505) 858–3100
www.tierrawestllc.com

NEW MEXICO ENERGY MINERAL AND NATURAL RESOURCE
ABANDONED MINE LAND PROGRAM

TITLE:
MADRID WATER – FIRE SUPPRESSION IMPROVEMENTS
STOCKPILE PLAN

LAST DESIGN UPDATE	MO./DAY/YR.	MO./DAY/YR.

PROJECT NO.	ZONE MAP NO.	SHEET	OF
EMNRD–MMD–2025–01	–	13	16

Z:\2023\2023094 Madrid Stormwater & Erosion Control Project\dwg\Construction\2023094–SP.dwg Aug 27, 2024 – 8:34am

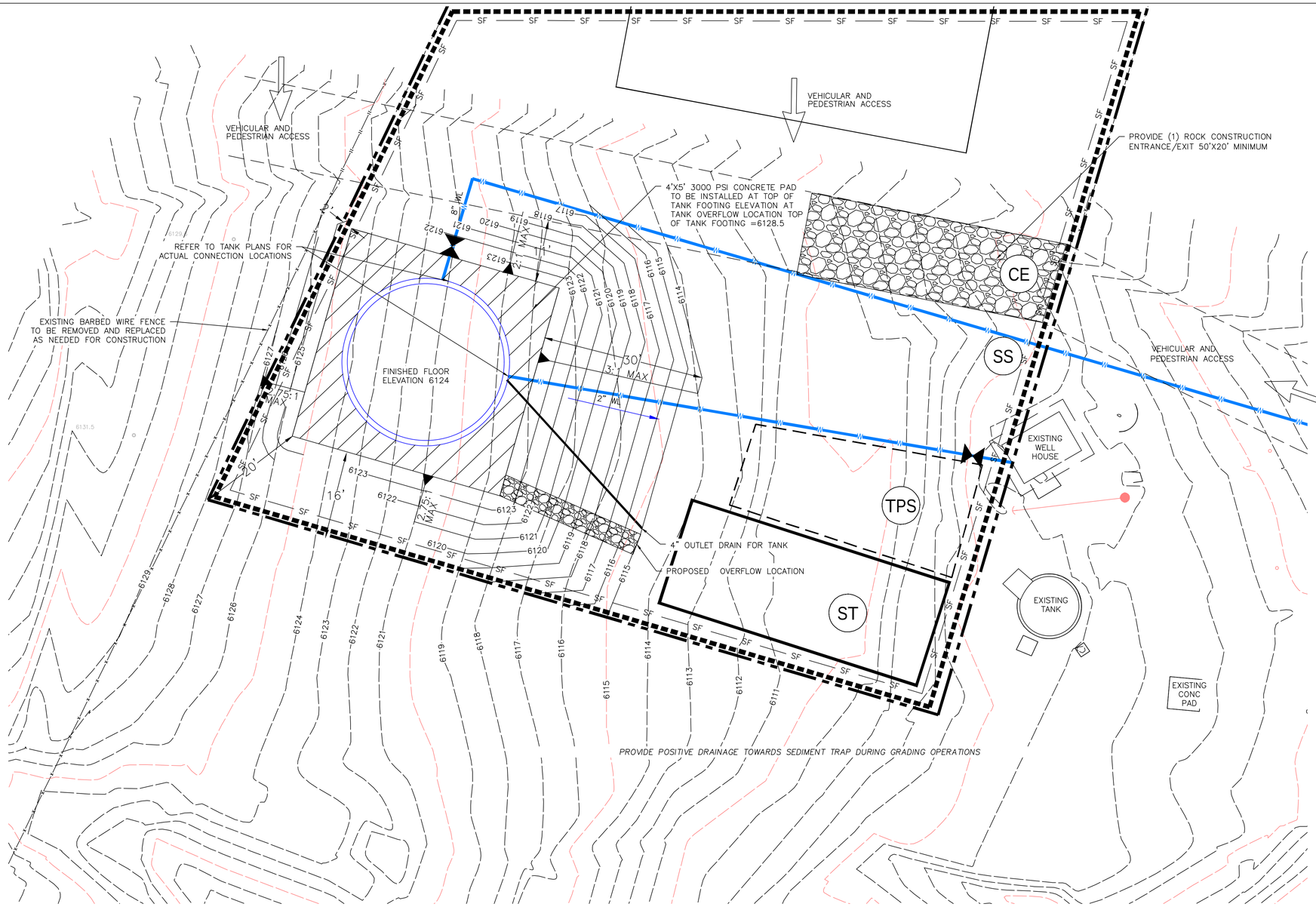

LEGEND

PROPOSED

- BOUNDARY LINE
- RIGHT OF WAY LINE
- LIMITS OF DISTURBANCE
- XXX CONTOUR ELEVATIONS
- SF TEMPORARY SILT FENCE
- TEMPORARY PARKING AND STORAGE
- 5056 EXISTING CONTOURS
- 5056 PROPOSED CONTOURS

EROSION DETAILS

- CE TEMPORARY STONE CONSTRUCTION EXIT
- SF TEMPORARY SILT FENCE
- ST TEMPORARY SEDIMENT TRAP W/ EMERGENCY OVERFLOW
- IP INLET PROTECTION
- SS SWPPP SIGN
- W WATTLES

EROSION NOTES

- TPS TEMPORARY PARKING AND STORAGE

NATURE AND EXTENT OF CONSTRUCTION ACTIVITIES:

NATURE OF CONSTRUCTION ACTIVITIES: ROUGH/FINE GRADING OF THE SITE, INSTALLATION OF PRIVATE UTILITIES (WATER, SANITARY, & STORM), PAVING OF ONSITE PARKING, CURB, AND SIDEWALKS, AND CONSTRUCTION OF BUILDING.

PROPERTY SIZE: 9.0 ACRES

DISTURBED AREA SIZE: 10.0 ACRES

DESCRIPTION OF CONSTRUCTION SUPPORT ACTIVITIES: EQUIPMENT STAGING YARD, MATERIALS STORAGE AREA, EXCAVATED MATERIALS DISPOSAL/STORAGE AREAS.

MAXIMUM DISTURBED AREA SIZE: 10.0 ACRES

STORMWATER TEAM MEMBERS:

SEDIMENT REMOVAL NAME:
PHONE:
EMAIL:

BMP MAINTENANCE NAME:
PHONE:
EMAIL:

INSPECTIONS NAME:
PHONE:
EMAIL:

LIST OF OPERATORS:

OPERATOR 1 NAME:
PHONE:
EMAIL:

OPERATOR 2 NAME:
PHONE:
EMAIL:

OPERATOR 3 NAME:
PHONE:
EMAIL:

N

GRAPHIC SCALE

10 0 5 10

(IN FEET)
1 inch = 10 ft.

GROUND COVER (PRE-CONSTRUCTION):

THE UNDISTURBED AND PRE-CONSTRUCTION GROUND COVER CONSISTS OF UNCOMPACTED SOIL WITH NATIVE GRASSES, WEEDS, AND SHRUBS WITH MINIMAL DISTURBANCES TO GRADING.

CAUTION

ALL EXISTING UTILITIES SHOWN WERE OBTAINED FROM RESEARCH, AS-BUILTS, SURVEYS OR INFORMATION PROVIDED BY OTHERS. IT SHALL BE THE SOLE RESPONSIBILITY OF THE CONTRACTOR TO CONDUCT ALL NECESSARY FIELD INVESTIGATIONS PRIOR TO AND INCLUDING ANY EXCAVATION, TO DETERMINE THE ACTUAL LOCATION OF UTILITIES AND OTHER IMPROVEMENTS, PRIOR TO STARTING THE WORK. ANY CHANGES FROM THIS PLAN SHALL BE COORDINATED WITH AND APPROVED BY THE ENGINEER.

SWPPP PURPOSE:

THE PURPOSE OF THIS SWPPP IS TO APPLY SWPPP CONTROLS THAT ARE REQUIRED DURING DEVELOPMENT OF SITE.

AS BUILT INFORMATION
CONTRACTOR
WORK STAKED BY — DATE
INSPECTOR'S ACCEPTANCE BY — DATE
FIELD VERIFICATION BY — DATE
DRAWINGS CORRECTED BY — DATE
MICRO-FILM INFORMATION
RECORDED BY — DATE
NO.

BENCH MARKS

SURVEY INFORMATION
FIELD NOTES
NO. | BY | DATE

ENGINEER'S SEAL
RONALD R. BOHANNAN
NEW MEXICO
7868
PROFESSIONAL ENGINEER
06/26/24

NO.	DATE	REMARKS	BY
		REVISIONS	

DESIGN
DESIGNED BY: JN — DATE: JUNE 2024
DRAWN BY: RMG — DATE: JUNE 2024
DRAWN NAME: MADRID WATER TANK IMPROVEMENTS — JOB NO.: 2023094
CHECKED BY: RRB — DATE: JUNE 2024

TIERRA WEST, LLC
5571 MIDWAY PARK PLACE NE
ALBUQUERQUE, NEW MEXICO 87109
(505) 858-3100
www.tierrawestllc.com

NEW MEXICO ENERGY MINERAL AND NATURAL RESOURCE
ABANDONED MINE LAND PROGRAM

TITLE:
MADRID WATER - FIRE SUPPRESSION IMPROVEMENTS
EROSION CONTROL PLAN

LAST DESIGN UPDATE | MO./DAY/YR. | MO./DAY/YR.

TIERRA WEST, LLC
5571 Midway Park Place NE
Albuquerque, NM 87109
Phone: 505-858-3100
Fax: 505-858-1118

PROJECT NO. EMNRD-MMD-2025-01
ZONE MAP NO. —
SHEET 14 OF 16

Z:\2023\2023094 Madrid Stormwater & Erosion Control Project\dwg\Construction\2023094-ECP.dwg Aug 27, 2024 - 8:37am

ESC PLAN STANDARD NOTES:

1. ALL EROSION AND SEDIMENT CONTROL (ESC) WORK ON THESE PLANS, EXCEPT AS OTHERWISE STATED OR PROVIDED HEREON SHALL BE PERMITTED, CONSTRUCTED, INSPECTED, AND MAINTAINED IN ACCORDANCE WITH:
   a. THE CITY ORDINANCE § 14–5–2–11, THE ESC ORDINANCE,
   b. THE EPA'S 2022 CONSTRUCTION GENERAL PERMIT (CGP), AND
   c. THE CITY OF ALBUQUERQUE CONSTRUCTION BMP MANUAL.
2. ALL BMP'S MUST BE INSTALLED PRIOR TO BEGINNING ANY EARTH MOVING ACTIVITIES EXCEPT AS SPECIFIED HEREON IN THE PHASING PLAN. CONSTRUCTION OF EARTHEN BMP'S SUCH AS SEDIMENT TRAPS, SEDIMENT BASINS, AND DIVERSION BERMS SHALL BE COMPLETED AND INSPECTED PRIOR TO ANY OTHER CONSTRUCTION OR EARTHWORK. SELF–INSPECTION IS REQUIRED AFTER INSTALLATION OF THE BMPS AND PRIOR TO BEGINNING CONSTRUCTION.
3. SELF–INSPECTIONS – IN ACCORDANCE WITH CITY ORDINANCE § 14–5–2–11(C)(1), "AT A MINIMUM A ROUTINE SELF–INSPECTION IS REQUIRED TO REVIEW THE PROJECT FOR COMPLIANCE WITH THE CONSTRUCTION GENERAL PERMIT ONCE EVERY 14 DAYS AND AFTER ANY PRECIPITATION EVENT OF 1/4 INCH OR GREATER UNTIL THE SITE CONSTRUCTION HAS BEEN COMPLETED AND THE SITE DETERMINED AS STABILIZED BY THE CITY. REPORTS OF THESE INSPECTIONS SHALL BE KEPT BY THE PERSON OR ENTITY AUTHORIZED TO DIRECT THE CONSTRUCTION ACTIVITIES ON THE SITE AND MADE AVAILABLE UPON REQUEST.
4. CORRECTIVE ACTION REPORTS MUST BE KEPT BY THE PERSON OR ENTITY AUTHORIZED TO DIRECT THE CONSTRUCTION ACTIVITIES ON THE SITE AND MADE AVAILABLE UPON REQUEST.
5. FINAL STABILIZATION AND NOTICE OF TERMINATION (NOT) – IN ACCORDANCE WITH CITY ORDINANCE § 14–5–2–11(C)(1), SELF–INSPECTIONS MUST CONTINUE UNTIL THE SITE IS "DETERMINED AS STABILIZED BY THE CITY." THE PROPERTY OWNER/OPERATOR IS RESPONSIBLE FOR DETERMINING WHEN THE "CONDITIONS FOR TERMINATING CGP COVERAGE" PER CGP PART 8.2 ARE SATISFIED AND THEN FOR FILING THEIR NOTICE OF TERMINATION (NOT) WITH THE EPA. EACH OPERATOR MAY TERMINATE CGP COVERAGE ONLY IF ONE OR MORE OF THE CONDITIONS IN PART 8.2.1, 8.2.2, OR 8.2.3 HAS OCCURRED. AFTER FILING THE NOT WITH THE EPA, THE PROPERTY OWNER IS RESPONSIBLE FOR REQUESTING A DETERMINATION OF STABILIZATION FROM THE CITY.
6. WHEN DOING WORK IN THE CITY RIGHT–OF–WAY (E.G. SIDEWALK, DRIVE PADS, UTILITIES, ETC.) PREVENT DIRT FROM GETTING INTO THE STREET. IF DIRT IS PRESENT IN THE STREET, THE STREET SHOULD BE SWEPT DAILY OR PRIOR TO A RAIN EVENT OR CONTRACTOR INDUCED WATER EVENT (E.G. CURB CUT OR WATER TEST).
7. WHEN INSTALLING UTILITIES BEHIND THE CURB, THE EXCAVATED DIRT SHOULD NOT BE PLACED IN THE STREET.
8. WHEN CUTTING THE STREET FOR UTILITIES THE DIRT SHALL BE PLACED ON THE UPHILL SIDE OF THE STREET CUT AND THE AREA SWEPT AFTER THE WORK IS COMPLETE. A WATTLE OR MULCH SOCK MAY BE PLACED AT THE TOE OF THE EXCAVATED DIRT PILE IF SITE CONSTRAINTS DO NOT ALLOW PLACING THE EXCAVATED DIRT ON THE UPHILL SIDE OF THE STREET CUT.
9. ESC PLANS MUST SHOW LONGITUDINAL STREET SLOPE AND STREET NAMES. ON STREETS WHERE THE LONGITUDINAL SLOPE IS STEEPER THAN 2.5%, WATTLES/MULCH SOCKS OR J–HOOD SILT FENCE SHALL BE SHOWN IN THE FRONT YARD SWALE OR ON THE SIDE OF THE STREET.

GENERAL EROSION NOTES:

A. THE STORMWATER POLLUTION PREVENTION PLAN (SWPPP) IS COMPRISED OF THE SWPPP BOOK, THE 2017 GENERAL CONSTRUCTION PERMIT, THIS DRAWING ("TEMPORARY EROSION CONTROL AND SEDIMENTATION PLAN"), STANDARD DETAILS ("TEMPORARY EROSION CONTROL AND SEDIMENTATION DETAILS"), EPA NOTICE OF INTENT PERMIT AND ALL SUBSEQUENT REPORTS, CORRECTIVE ACTIONS AND EROSION CONTROL RELATED DOCUMENTS.

B. ALL OPERATORS AS DESIGNATED, CONTRACTORS AND SUBCONTRACTORS INVOLVED WITH SITE ACTIVITIES RELATED TO STORM WATER POLLUTION PREVENTION SHALL REVIEW A COPY OF THE STORM WATER POLLUTION PREVENTION PLAN (SWPPP), THE 2017 CONSTRUCTION GENERAL PERMIT, THE NATIONAL POLLUTANT DISCHARGE ELIMINATION SYSTEM (NPDES), THE CLEAN WATER ACT OF 1972 AND BECOME FAMILIAR WITH THEIR CONTENTS.

C. THE OPERATOR IN CONTROL OF DAILY SITE ACTIVITIES SHALL IMPLEMENT BEST MANAGEMENT PRACTICES AS REQUIRED BY THE SWPPP. ADDITIONAL BEST MANAGEMENT PRACTICES SHALL BE IMPLEMENTED AS DICTATED BY CONDITIONS THAT MAY OCCUR AT NO ADDITIONAL COST TO PROJECT OWNER THROUGHOUT ALL PHASES OF CONSTRUCTION.

D. BEST MANAGEMENT PRACTICES (BMP'S) AND CONTROLS SHALL CONFORM TO ALL FEDERAL, STATE, OR LOCAL REQUIREMENTS OR MANUAL OF PRACTICE, AS APPLICABLE. OPERATOR WITH CONTROL OF DAILY SITE ACTIVITIES SHALL IMPLEMENT ADDITIONAL CONTROLS AS DIRECTED BY PERMITTING AGENCY, LOCAL JURISDICTIONAL AUTHORITY OR SWPPP COMPLIANCE INSPECTOR.

E. THE TEMPORARY EROSION CONTROL AND SEDIMENTATION PLAN IS A WORKING DOCUMENT AND IS REQUIRED TO BE UPDATED WITHIN 24 HOURS OF ANY CHANGES WHEN BMP'S ARE REPAIRED, RELOCATED OR REMOVED BY NOTING ON THE PLAN THE AREAS AND DATES OF THE REPAIRS, RELOCATIONS OR REMOVALS. AN ACTIVE COPY OF THE PLAN SHALL BE POSTED IN THE JOB SITE TRAILER ONSITE AND MUST BE MAINTAINED CURRENT AT ALL TIMES.

F. CONTRACTOR SHALL MINIMIZE CLEARING AND EARTH DISTURBANCE TO THE MAXIMUM ACREAGE AS REQUIRED BY THE EPA CONSTRUCTION GENERAL PERMIT.

G. CONTRACTOR SHALL DENOTE ON THIS PLAN, THE LOCATION OF TEMPORARY PARKING, STORAGE, PORTABLE SANITARY FACILITIES, OFFICE TRAILERS, AND ALL SUPPORT AREAS. RELOCATIONS OF EACH SHALL ALSO BE DOCUMENTED AS THEY OCCUR.

H. ALL WASH OUT WATER USED FOR CONCRETE, MASONRY, PAINT AND OTHER MATERIALS SHALL HAVE ADEQUATE SIGNAGE WITH PROPER CONTAINMENT AND DISPOSED OF PROPERLY WHEN CAPACITY REACHES 50% OR PER VENDOR RECOMMENDATIONS. VENDORS AND TRADESMEN SHALL BE INFORMED OF THE REQUIREMENTS TO USE THE WASH OUT.

I. A SPILL KIT SHALL BE READILY AVAILABLE TO CONTAIN AND CLEAN–UP FUEL OR CHEMICAL SPILLS AND LEAKS. A DISCHARGE OF ANY MATERIAL IN A QUANTITY THAT MAY WITHIN REASONABLE PROBABILITY CAUSE, INJURE OR BE DETRIMENTAL TO HUMAN HEALTH, ANIMAL OR PLANT LIFE, OR PROPERTY; OR INTERFERE WITH THE PUBLIC WELFARE MUST BE REPORTED TO THE NEW MEXICO ENVIRONMENTAL DEPARTMENT HOTLINE AT (505) 827–9329 FOR EMERGENCIES OR FOR NON EMERGENCIES AT (866)–428–6535.

J. IF UNSURE IF THE SPILL IS OF A SIGNIFICANT QUANTITY, THE SPILL SHOULD BE REPORTED TO THE HOTLINE AND INFORMATION PROVIDED WITH DETAILS OF THE SPILL FOR FURTHER ACTIONS.

K. DUST DURING CONSTRUCTION OPERATIONS SHALL BE FREQUENTLY CONTROLLED BY WATER SUPPRESSION METHODS ONLY, EARTH DISTURBING OPERATIONS SHALL CEASE IF HIGH WINDS ABOVE 35 MPH ARE PRESENT. THE USE OF MOTOR OILS AND OTHER PETROLEUM BASED OR TOXIC LIQUIDS IS STRICTLY PROHIBITED. OTHER CHEMICALS USED FOR DUST SUPPRESSION MUST BE APPROVED BY THE EPA PRIOR TO THEIR USE.

L. RUBBISH, TRASH, GARBAGE, LITTER, OR OTHER SUCH MATERIALS SHALL BE DEPOSITED INTO SEALED, COVERED, LEAK PROOF CONTAINERS. CONTAINERS SHALL BE DISPOSED OF PROPERLY WHEN CAPACITY IS REACHED. MATERIALS SHALL BE PREVENTED FROM LEAVING THE PREMISES THROUGH THE ACTION OF WIND OR STORMWATER.

M. ALL STORM WATER POLLUTION PREVENTION MEASURES AND CONTROLS PRESENTED ON THIS PLAN, AND IN THE STORM WATER POLLUTION PREVENTION PLAN, SHALL BE INITIATED PER THE SEQUENCE OF CONSTRUCTION AS NOTED.

N. DISTURBED PORTIONS OF THE SITE WHERE CONSTRUCTION ACTIVITY HAS BEEN TEMPORARILY SUSPENDED FOR 14 DAYS, SHALL HAVE TEMPORARILY STABILIZATION IN PLACE NO LATER THAN 14 DAYS FROM THE LAST DATE OF CONSTRUCTION ACTIVITY OCCURRING THESE AREAS.

O. TEMPORARY COVER AND FINAL STABILIZATION (PART 2.2.12 (a) AND (b) RESPECTIVELY ARE TO BE PER COA STD SPEC 1012 NATIVE SEED WITH HYDROMULCH AND AGGREGATE MULCH (2–4") RESPECTIVELY.

P. IF THE ACTION OF VEHICLES OR EQUIPMENTS TRAVELING OVER THE CONSTRUCTION ENTRANCES IS NOT SUFFICIENT TO REMOVE THE MAJORITY OF DIRT OR MUD FROM LEAVING THE SITE, THEN THE LENGTH OF THE EXIT SHOULD BE EXTENDED TO PROVIDE ADDITIONAL TIRE ROTATIONS, LARGER ROCK MAY BE USED TO CREATE A SUFFICIENT JARRING MOTION OR INSTALL A TIRE WASH OFF WITH A SEDIMENT TRAP BEFORE LEAVING THE SITE.

Q. ALL MATERIALS SPILLED, DROPPED, WASHED, OR TRACKED FROM VEHICLES ONTO ROADWAYS OR INTO STORM DRAINS MUST BE REMOVED IMMEDIATELY.

R. THE OPERATOR IN CHARGE OF THE DAILY SITES ACTIVITIES WILL BE RESPONSIBLE FOR REMOVING SEDIMENT OR SOILS ACCUMULATING MORE THAN 50% OF THE DESIGN CAPACITY IN DETENTION PONDS, SILT FENCING OR OTHER SIMILAR EROSION CONTROLS.

S. ON–SITE & OFFSITE SOIL STOCKPILE AND BORROW AREAS SHALL BE PROTECTED FROM EROSION AND SEDIMENTATION THROUGH IMPLEMENTATION OF BEST MANAGEMENT PRACTICES, AS REQUIRED PER THE CONSTRUCTION GENERAL PERMIT. STOCKPILE AND BORROW AREA LOCATIONS SHALL BE NOTED ON THE ESC PLAN AND PERMITTED IN ACCORDANCE WITH LOCAL AUTHORITIES HAVING JURISDICTIONAL CONTROL.

T. SLOPES SHALL BE LEFT WITH CROSS SLOPE GRADING PATTERN AND IN A ROUGHENED CONDITION DURING THE GRADING PHASE TO REDUCE RUNOFF VELOCITIES AND EROSION RILLS. EXCESSIVE SLOPES MAY REQUIRE ADDITIONAL INDUSTRY STANDARD CONTROLS TO PREVENT EROSION.

U. DUE TO THE GRADE CHANGES DURING THE DEVELOPMENT OF THE PROJECT, THE OPERATOR IN CONTROL OF THE SITE'S DAILY ACTIVITIES SHALL BE RESPONSIBLE FOR ADJUSTING AND MAINTAINING ALL EROSION CONTROL TO PREVENT EROSION.

V. ALL DISTURBED AREAS SHALL BE SUPPRESSED BY WATER AND ALL CONTROLS LEFT IN GOOD WORKING CONDITION AT THE END OF EACH WORKING DAY, THIS INCLUDES REPLACEMENT OF SILT FENCING AND/OR OTHER SURFACE CONTROLS, TRACK OUT SWEPT CLEAN, BACKFILL OF OPEN TRENCHES AND ANY OTHER EROSION CONTROLS.

BMP MAINTENANCE

ALL MEASURES STATED IN THIS EROSION AND SEDIMENT CONTROL PLAN, AND IN THE STORM WATER POLLUTION PREVENTION PLAN, SHALL BE MAINTAINED IN FULLY FUNCTIONAL CONDITION UNTIL NO LONGER REQUIRED FOR A COMPLETED PHASE OF WORK OR UNTIL FINAL STABILIZATION OF THE SITE IS ACHIEVED. ALL EROSION AND SEDIMENTATION CONTROL MEASURES SHALL BE INSPECTED AT THE END OF THE WORKDAY BY A QUAILIFIED MEMBER OF THE SWPPP COMPLIANCE TEAM. THE OPERATOR WITH CONTROL OF THE SITES DAILY ACTIVITIES IS RESPONSIBLE TO MAINTAIN, CLEAN AND REPAIR EROSION CONTROLS IN ACCORDANCE WITH THE FOLLOWING:

1. INLET PROTECTION DEVICES AND BARRIERS SHALL BE REPAIRED OR REPLACED, IF THEY SHOW SIGNS OF UNDERMINING OR DETERIORATION. SEDIMENT SHALL BE REMOVED TO INSURE PROPER FLOWS. INLET PROTECTION TYPES MAY NEED TO BE MODIFIED DURING THE CONSTRUCTION PROGRESS.
2. ALL SEEDED AREAS SHALL BE CHECKED REGULARLY TO SEE THAT A GOOD STAND OF VEGETATION IS MAINTAINED. AREAS SHOULD BE FERTILIZED, WATERED, AND RE–SEEDED AS NEEDED.
3. SILT FENCES, WADDLES OR OTHER CONTROLS SHALL BE REPLACED OR REPAIRED TO PROPER FUNCTIONING CONDITION, IF DAMAGED. SEDIMENT AND SOIL SHALL BE REMOVED WHEN REACHES ONE–HALF THE HEIGHT OF THE CONTROL.
4. THE CONSTRUCTION EXITS SHALL BE MAINTAINED IN A CONDITION WHICH WILL PREVENT TRACKING OF SEDIMENT ONTO PUBLIC OR PRIVATE ROADWAYS. THIS MAY REQUIRE PERIODIC TOP DRESSING, EXTENDING OR OTHER MODIFICATIONS TO THE CONSTRUCTION EXITS AS CONDITIONS DEMAND. SITE TRAFFIC SHOULD BE LIMITED TO THE CONTROLLED EXITS ONLY.
5. SEDIMENTATION BASINS SHALL BE MAINTAINED IN OPERATIONAL CONDITIONS AT ALL TIMES. SEDIMENT SHALL BE REMOVED FROM SEDIMENT BASINS OR TRAPS WHEN THE DESIGN CAPACITY HAS BEEN REDUCED BY 50%.
6. REFERENCE THE SWPPP BOOK FOR ALL EROSION CONTROL MAINTENANCE PROCEDURES AND FREQUENCIES. CONSULT THE SWPPP PREPARER WITH ANY QUESTIONS REGARDING THIS SWPPP AND ITS REQUIREMENTS.

EROSION CONTROL NOTES:

1. CONTRACTOR IS RESPONSIBLE FOR OBTAINING A TOPSOIL DISTURBANCE PERMIT FROM THE LOCAL JURISDICTIONAL AUTHORITY PRIOR TO BEGINNING WORK.
2. THE OPERATOR WITH CONTROL OF THE DAILY SITES ACTIVITIES IS RESPONSIBLE FOR MAINTAINING RUN–OFF and RUN ON OF SITE DURING CONSTRUCTION.
3. THE OPERATOR WITH CONTROL OF THE DAILY SITES ACTIVITIES IS RESPONSIBLE FOR CLEANING ALL SEDIMENT THAT GETS INTO EXISTING RIGHT–OF–WAY. REPAIR OF DAMAGED FACILITIES AND CLEANUP OF SEDIMENT ACCUMULATIONS ON ADJACENT PROPERTIES AND IN PUBLIC FACILITIES IS THE RESPONSIBILITY OF THE CONTRACTOR.
4. ALL EXPOSED EARTH SURFACES MUST HAVE APPROPRIATE CONTROLS TO PROTECT FROM WIND AND WATER EROSION DURING ALL PHASES OF THE PROJECT.
5. STOCKPILES INACTIVE FOR 14 DAYS ARE REQUIRED TO HAVE TEMPORARY STABILIZATION OR APPROPRIATE COVER TO CONTROL WIND AND WATER EROSION.
6. THE OPERATOR WITH CONTROL OF THE DAILY SITES ACTIVITIES IS REQUIRED TO MAINTAIN ALL SITE BMP'S IN GOOD CONDITION FOR THE DURATION OF THE PROJECT UNTIL A NOTICE OF TERMINATION IS ACCEPTED BY THE EPA.
7. IF SITE EARTH DISTURBANCES EXCEED 5 ACRES AT ANY ONE TIME, TEMPORARY AND/OR PERMANENT STABILIZATION MUST BE COMPLETED WITHIN 7 DAYS WHEN AREA BECOMES INACTIVE OR EARTH DISTURBING ACTIVITIES ARE COMPLETE. SITE EARTH DISTURBANCES OF LESS THAN 5 ACRES, HAVE 14 DAYS TO PROVIDE TEMPORARY OR PERMANENT STABILIZATION WHEN AREA BECOMES INACTIVE OR EARTH DISTURBING ACTIVITIES ARE COMPLETE.

GENERAL NOTES:

1. PROVIDE POSITIVE DRAINAGE TOWARDS SEDIMENT TRAPS DURING GRADING OPERATIONS.
2. INSTALL WATTLES ALONG LINEAR CONSTRUCTION OF SD
3. PROVIDE POSITIVE DRAINAGE TO TEMPORARY SEDIMENT BASIN DURING ALL GRADING ACTIVITIES
4. OFFSITE GRADING AND ROADWAY IMPROVEMENTS ARE TO BE COMPLETED BY OTHERS. COORDINATION OF OFFSITE BMP'S WITH PROPOSED ONSITE BMP'S SHALL BE REQUIRED BY THE CONTRACTOR(S)

AS BUILT INFORMATION
CONTRACTOR
WORK STAKED BY — DATE
INSPECTOR'S AUTHORIZATION BY — DATE
FIELD VERIFICATION BY — DATE
DRAWINGS CORRECTED BY — DATE
MICRO–FILM INFORMATION
RECORDED BY — DATE
NO.

BENCH MARKS

SURVEY INFORMATION
FIELD NOTES

NO.	BY	DATE

ENGINEER'S SEAL
RONALD R. BOHANNAN
NEW MEXICO
7868
PROFESSIONAL ENGINEER
06/26/24

NO.	DATE	REMARKS	BY

REVISIONS

DESIGN
DESIGNED BY: JN — DATE: JUNE 2024
DRAWN BY: RMG — DATE: JUNE 2024
DRAWN NAME: MADRID WATER TANK IMPROVEMENTS — JOB NO.: 2023094
CHECKED BY: RRB — DATE: JUNE 2024

TIERRA WEST, LLC
5571 MIDWAY PARK PLACE NE
ALBUQUERQUE, NEW MEXICO 87109
(505) 858–3100
www.tierrawestllc.com

NEW MEXICO ENERGY MINERAL AND NATURAL RESOURCE
ABANDONED MINE LAND PROGRAM

TITLE:
MADRID WATER – FIRE SUPPRESSION IMPROVEMENTS
EROSION CONTROL NOTES

LAST DESIGN UPDATE	MO./DAY/YR.	MO./DAY/YR.

TIERRA WEST, LLC
5571 Midway Park Place NE
Albuquerque, NM 87109
Phone: 505-858-3100
Fax: 505-858-1118

PROJECT NO.	ZONE MAP NO.	SHEET	OF
EMNRD–MMD–2025–01	–	15	16

Z:\2023\2023094 Madrid Stormwater & Erosion Control Project\dwg\Construction\2023094–ECP.dwg Aug 27, 2024 – 8:38am

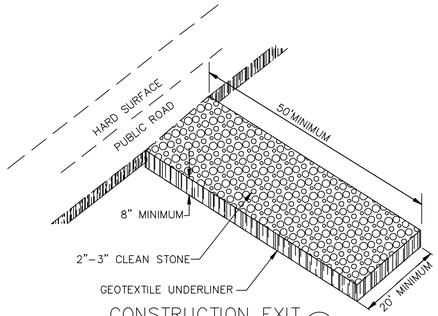

CONSTRUCTION EXIT (CE)
N.T.S.

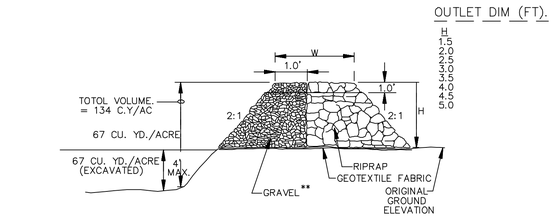

SECTION A–A

** GRAVEL SHALL BE 2"–3" CLEAN STONE

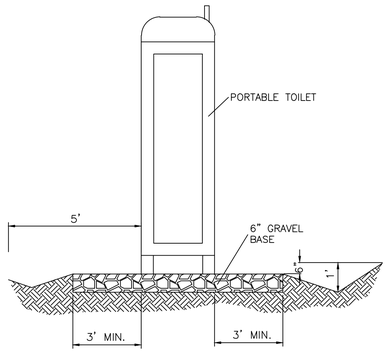

PORTABLE TOILET CONTAINMENT DETAIL

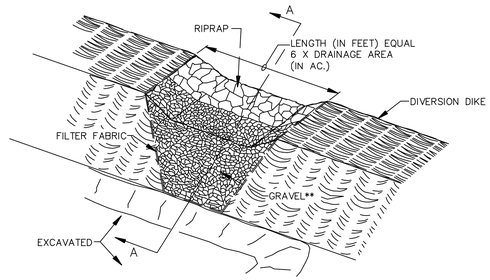

OUTLET (PERSPECTIVE)
TEMPORARY SEDIMENT TRAP (ST)
N.T.S.

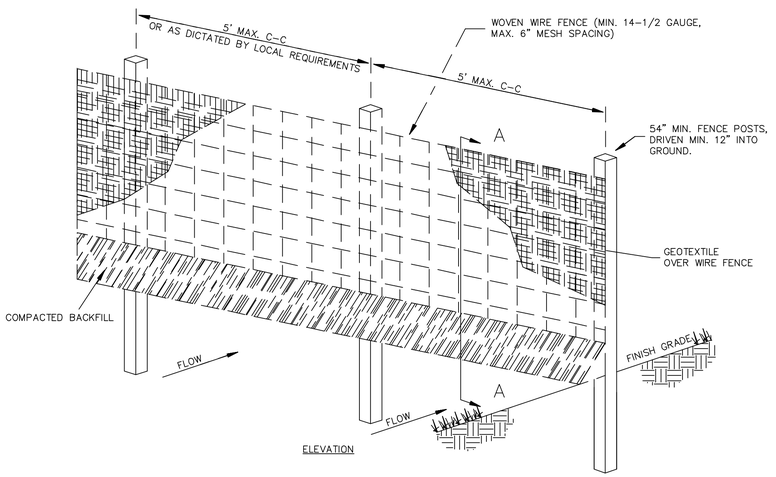

ELEVATION

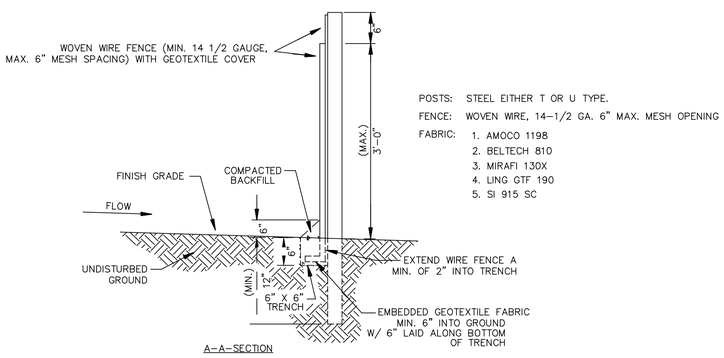

A–A–SECTION

POSTS: STEEL EITHER T OR U TYPE.

FENCE: WOVEN WIRE, 14–1/2 GA. 6" MAX. MESH OPENING

FABRIC:
1. AMOCO 1198
2. BELTECH 810
3. MIRAFI 130X
4. LING GTF 190
5. SI 915 SC

1. WOVEN WIRE FENCE TO BE FASTENED SECURELY TO FENCE POSTS WITH WIRE TIES.
2. GEOTEXTILE TO BE FASTENED SECURELY TO WOVEN WIRE FENCE WITH TIES SPACED EVERY 24" AT TOP AND MID SECTION.
3. WHEN TWO SECTIONS OF GEOTEXTILE ADJOIN EACH OTHER THEY SHALL BE OVERLAPPED BY SIX INCHES AND FOLDED.
4. MAINTENANCE SHALL BE PERFORMED AS NOTED IN THE EROSION CONTROL PLAN. COLLECTED MATERIAL SHALL BE REMOVED WHEN "BULGES" DEVELOP IN THE SILT FENCE.
5. ALL SILT FENCE SHALL INCLUDE WIRE SUPPORT UNLESS INDICATED OTHERWISE

SEDIMENTATION/SILT FENCE WITH WIRE SUPPORT (SF)
N.T.S.

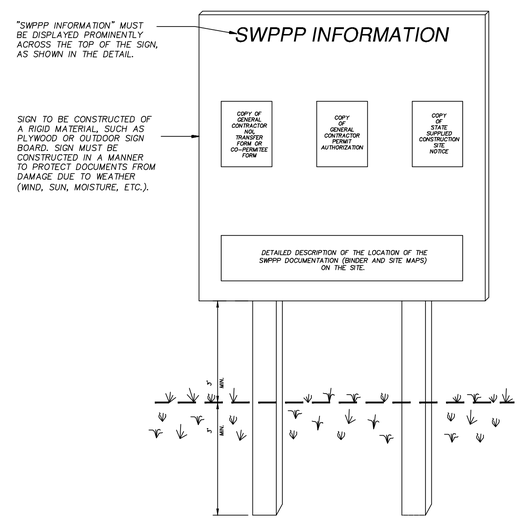

NOTES:
1) THE SWPPP INFORMATION SIGN MUST BE LOCATED NEAR THE CONSTRUCTION EXIT OF THE SITE, SUCH THAT IT IS ACCESSIBLE AND VIEWABLE BY THE GENERAL PUBLIC, BUT NOT OBSTRUCTING VIEWS AS TO CAUSE A SAFETY HAZARD.
2) ALL POSTED DOCUMENTS MUST BE MAINTAINED IN A CLEARLY READABLE CONDITION AT ALL TIMES THROUGHOUT CONSTRUCTION AND UNTIL THE NOTICE–OF–TERMINATION (NOT) IS FILED FOR THE PERMIT.
3) CONTRACTOR SHALL POST OTHER STORM WATER AND/OR EROSION AND SEDIMENT CONTROL RELATED PERMITS ON THE SIGN AS REQUIRED BY THE GOVERNING AGENCY.
4) SIGN SHALL BE LOCATED OUTSIDE OF PUBLIC RIGHT–OF–WAY AND EASEMENTS UNLESS APPROVED BY THE GOVERNING AGENCY.
5) CONTRACTOR IS RESPONSIBLE FOR ENSURING STABILITY OF THE SWPPP INFORMATION SIGN.

SWPPP INFORMATION SIGN (SS)
N.T.S.

AS BUILT INFORMATION
CONTRACTOR
WORK STAKED BY — DATE
INSPECTOR'S ACCEPTANCE BY — DATE
FIELD VERIFICATION BY — DATE
DRAWINGS CORRECTED BY — DATE
MICRO–FILM INFORMATION
RECORDED BY — DATE
NO.

BENCH MARKS

SURVEY INFORMATION
FIELD NOTES

NO.	BY	DATE

ENGINEER'S SEAL
RONALD R. BOHANNAN
NEW MEXICO
7868
PROFESSIONAL ENGINEER
06/26/24

NO.	DATE	REMARKS	BY

REVISIONS

DESIGN
DESIGNED BY: JN — DATE: JUNE 2024
DRAWN BY: RMG — DATE: JUNE 2024
DRAWN NAME: MADRID WATER TANK IMPROVEMENTS — JOB NO.: 2023094
CHECKED BY: RRB — DATE: JUNE 2024

TIERRA WEST, LLC
5571 MIDWAY PARK PLACE NE
ALBUQUERQUE, NEW MEXICO 87109
(505) 858–3100
www.tierrawestllc.com

NEW MEXICO ENERGY MINERAL AND NATURAL RESOURCE
ABANDONED MINE LAND PROGRAM

TITLE:
MADRID WATER – FIRE SUPPRESSION IMPROVEMENTS
EROSION CONTROL DETAILS

LAST DESIGN UPDATE

MO./DAY/YR.	MO./DAY/YR.

TIERRA WEST, LLC
5571 Midway Park Place NE
Albuquerque, NM 87109
Phone: 505-858-3100
Fax: 505-858-1118

PROJECT NO. EMNRD–MMD–2025–01
ZONE MAP NO. –
SHEET 16 OF 16

Z:\2023\2023094 Madrid Stormwater & Erosion Control Project\dwg\Construction\2023094–ECP.dwg Aug 27, 2024 – 8:38am