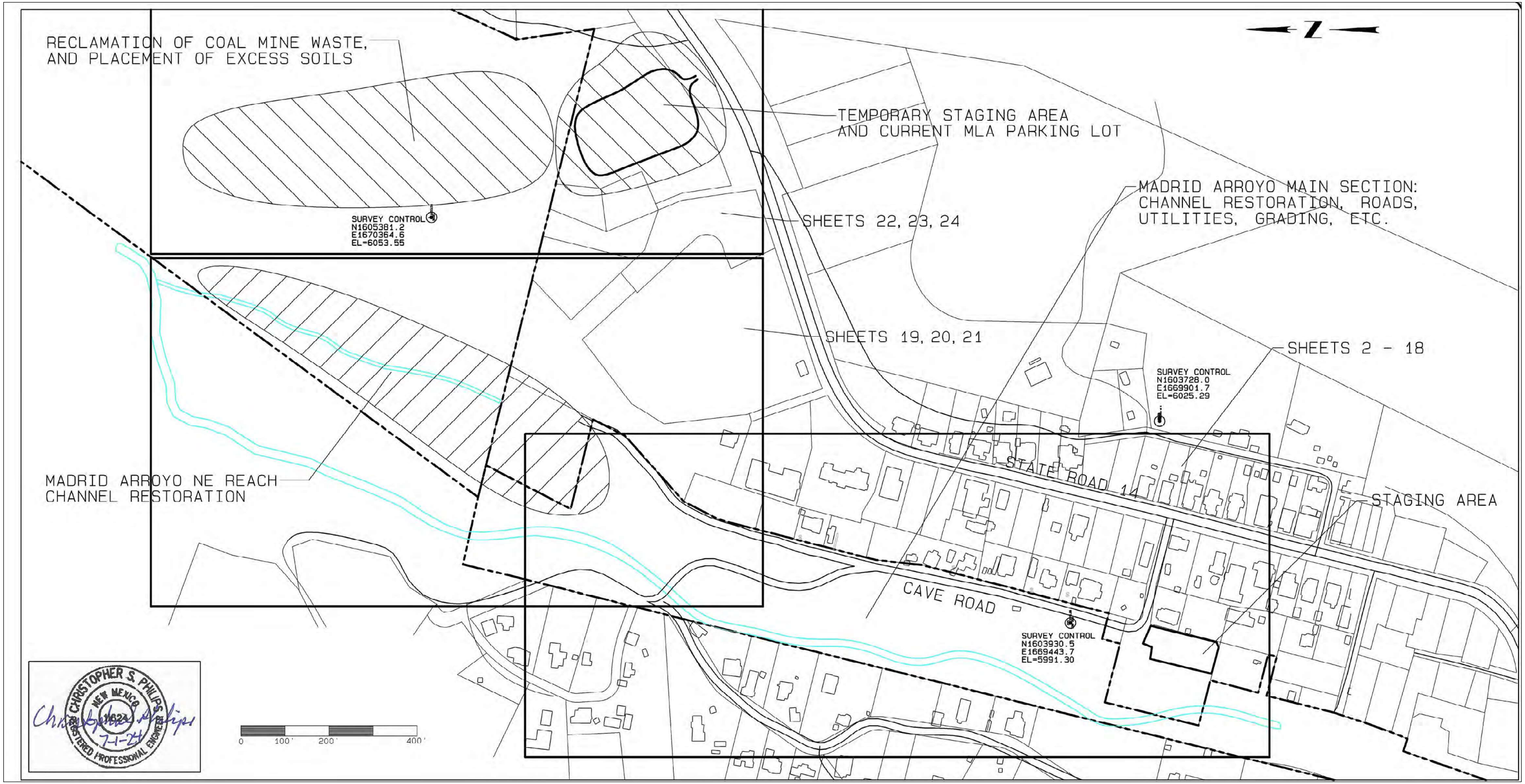

CHRISTOPHER S. PHILIPS
NEW MEXICO
16221
REGISTERED PROFESSIONAL ENGINEER
7-1-24

NO.	DATE	APPR.	REVISION	NO.	DATE	APPR.	REVISION
B	11/4/24		100% FINAL				
C	3/27/25		FOR-BID				

VILLAGE OF MADRID, NM
STORM WATER & EROSION CONTROL PROJECT

MADRID NEW MEXICO

RIVERBEND ENGINEERING, LLC

ALBUQUERQUE NEW MEXICO

CHECKED	CP	DATE 10/31/24	CLIENT APPROVALS / DATE
DES. ENG.	CP	10/31/24	
PROJ. ENG.	CP	10/31/24	
PROJ. MGR.	RE	10/31/24	
APPROVED			
APPROVED			

MADRID ARROYO
LOCATION MAP

DRAWN	DATE	DWG. NO.	REV. NO.
C.PHILIPS	----	C201	C
SCALE	W.O. NO. 15740.001.003	SHT. 51 of 83	

C:\Users\waters\Weston Solutions, Inc\Engineering Community • AutoCAD Projects\MADRID STORMWATER\RIVERBEND 100% FINAL.dwg October 30, 2024 • 11:42am

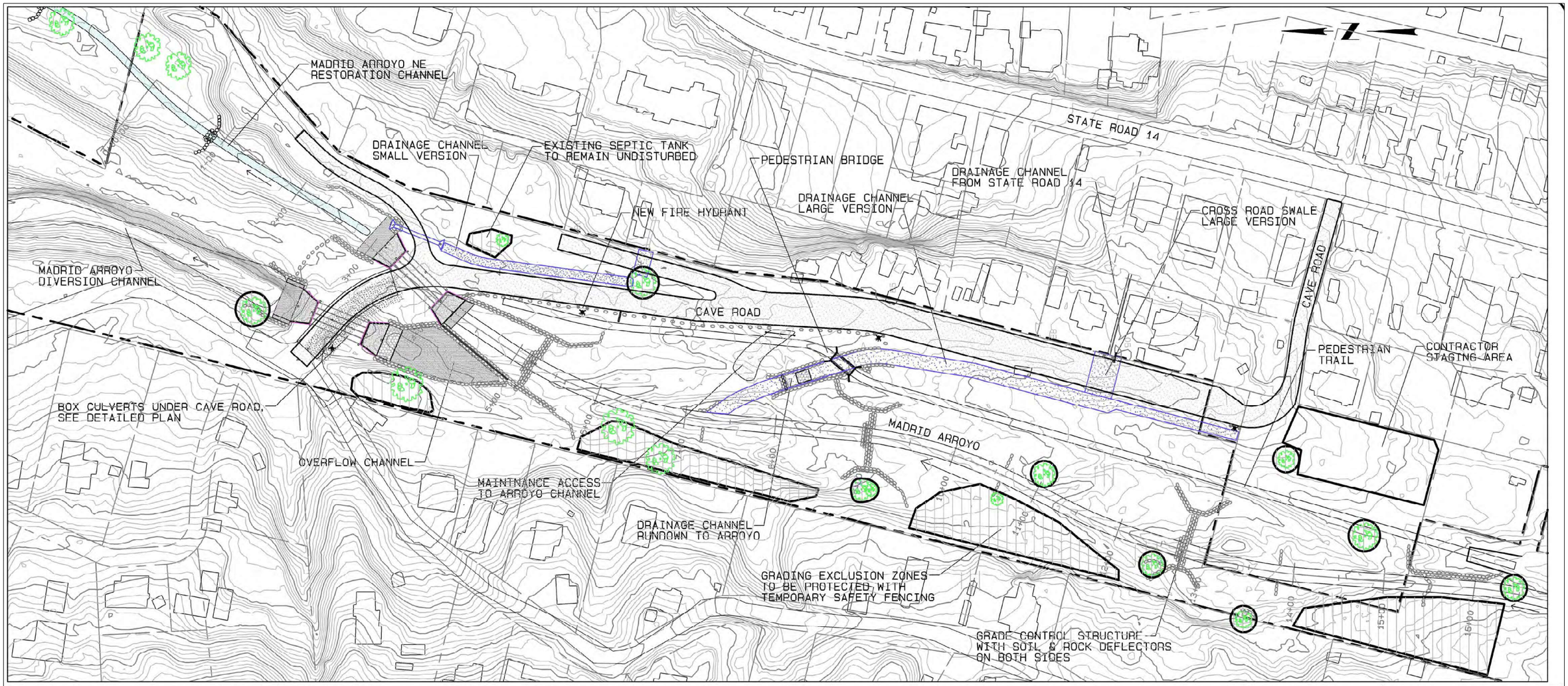

CHRISTOPHER S. PHILIPS
NEW MEXICO
21624
REGISTERED PROFESSIONAL ENGINEER
Christopher S. Philips
7-1-24

NO.	DATE	APPR.	REVISION	NO.	DATE	APPR.	REVISION
B	11/4/24		100% FINAL				
C	3/27/25		FOR-BID				

VILLAGE OF MADRID, NM
STORM WATER & EROSION CONTROL PROJECT

MADRID NEW MEXICO

RIVERBEND ENGINEERING, LLC

ALBUQUERQUE NEW MEXICO

CHECKED	CP	DATE 10/31/24	CLIENT APPROVALS / DATE
DES. ENG.	CP	10/31/24	
PROJ. ENG.	CP	10/31/24	
PROJ. MGR.	RE	10/31/24	
APPROVED			
APPROVED			

MADRID ARROYO
GENERAL SITE PLAN

DRAWN	DATE	DWG. NO.	REV. NO.
C.PHILIPS	----	C202	C
SCALE	W.O. NO. 15740.001.003	SHT. 52 of 83	

C:\Users\waters\Weston Solutions, Inc\Engineering Community - AutoCAD\Projects\MADRID STORMWATER\RIVERBEND 100% FINAL.dwg October 30, 2024 - 11:42am

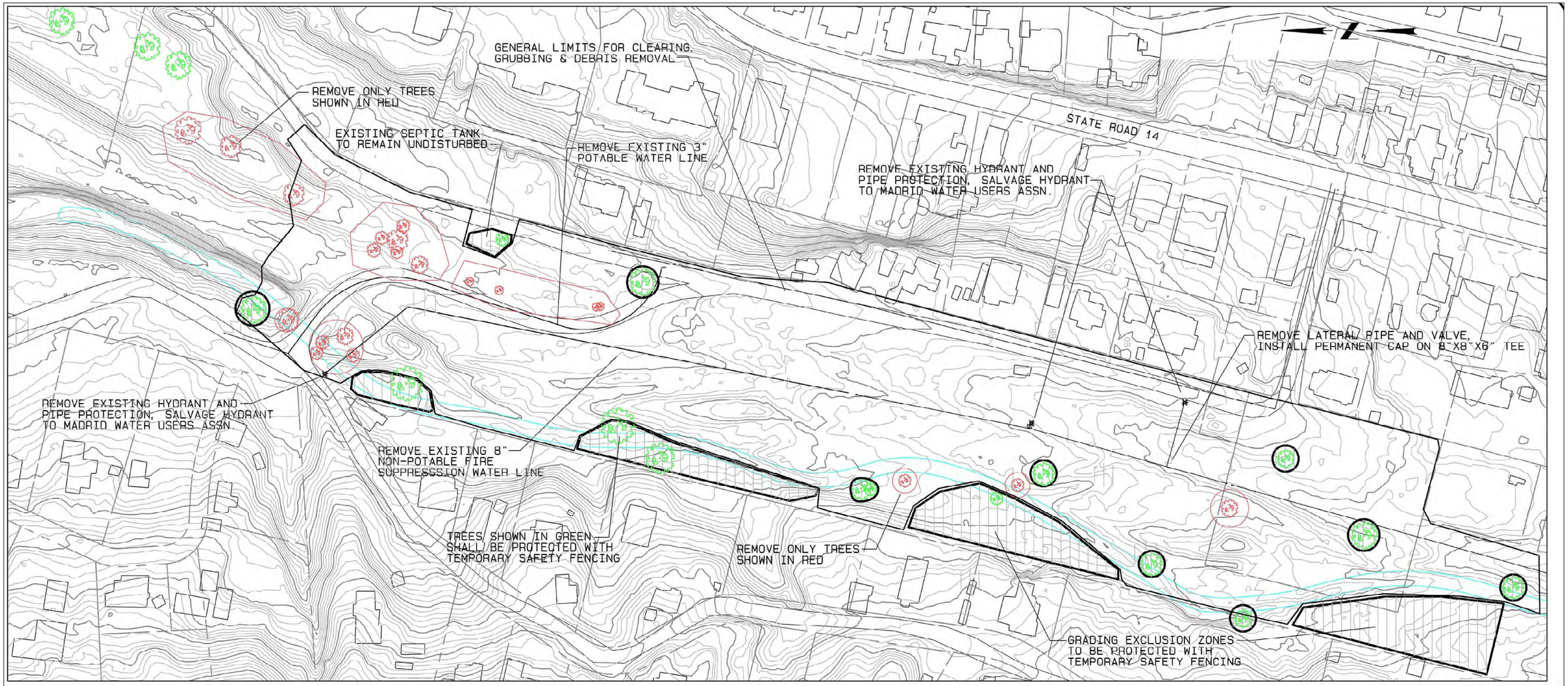

NOTES:
1) INSTALL NEW WATER ISOLATION VALVES BEFORE WATER LINE REMOVALS, SO THAT WATER SERVICE INTERUPTIONS ARE MINIMIZED.
2) INSTALL TEMPORARY SAFETY FENCING AROUND TREES THAT SHALL REMAIN, AND AROUND GRADING EXCLUSION ZONES
3) REMOVE ALL CLEAR & GRUB MATERIAL FROM THE SITE, AND ALSO TRASH AND METAL WASTE UNCOVERED IN THE GRADING OPERATION

0 50' 100' 200'

CHRISTOPHER S. PHILIPS NEW MEXICO 11624 REGISTERED PROFESSIONAL ENGINEER
7-1-24

NO.	DATE	APPR.	REVISION	NO.	DATE	APPR.	REVISION
B	11/4/24		100% FINAL				
C	3/27/25		FOR-BID				

VILLAGE OF MADRID, NM
STORM WATER & EROSION CONTROL PROJECT

MADRID NEW MEXICO

RIVERBEND ENGINEERING, LLC

ALBUQUERQUE NEW MEXICO

		DATE	CLIENT APPROVALS	DATE
CHECKED	CP	10/31/24		
DES. ENG.	CP	10/31/24		
PROJ. ENG.	CP	10/31/24		
PROJ. MGR.	RE	10/31/24		
APPROVED				
APPROVED				

MADRID ARROYO
PROTECTIONS AND REMOVALS PLAN

DRAWN	DATE	DWG. NO.	REV. NO.
C.PHILIPS	----	C203	C
SCALE	W.O. NO. 15740.001.003	SHT. 53 of 83	

C:\Users\waters\Verizon Solutions, Inc-Engineering Community - AutoCAD\Projects\MADRID STORMWATER\RIVERBEND 100% FINAL.dwg October 30, 2024 - 11:43am

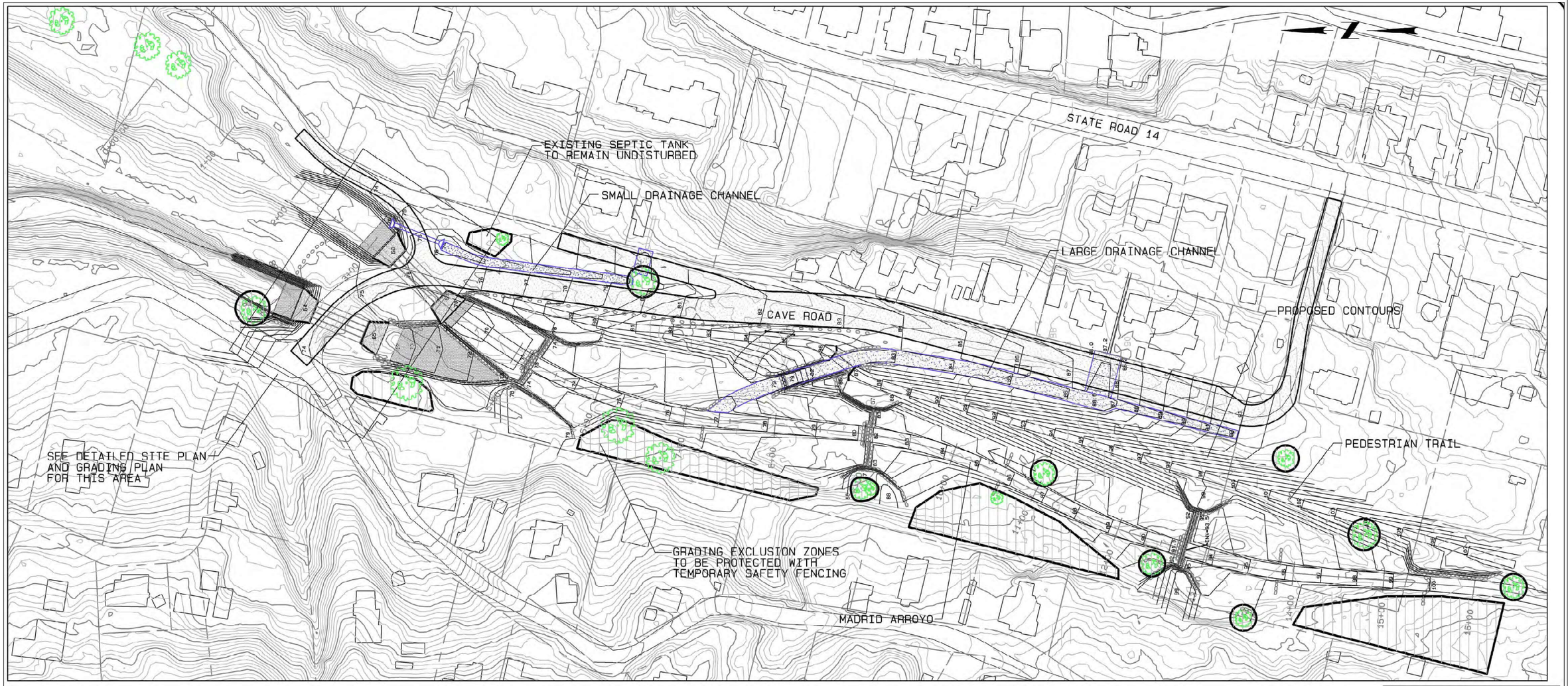

CHRISTOPHER S. PHILIPS
NEW MEXICO
11623
REGISTERED PROFESSIONAL ENGINEER
7-1-24

NO.	DATE	APPR.	REVISION	NO.	DATE	APPR.	REVISION
B	11/4/24		100% FINAL				
C	3/27/25		FOR-BID				

VILLAGE OF MADRID, NM
STORM WATER & EROSION CONTROL PROJECT

MADRID NEW MEXICO

RIVERBEND ENGINEERING, LLC

ALBUQUERQUE NEW MEXICO

CHECKED		DATE	CLIENT APPROVALS	DATE
	CP	10/31/24		
DES. ENG.	CP	10/31/24		
PROJ. ENG.	CP	10/31/24		
PROJ. MGR.	RE	10/31/24		
APPROVED				
APPROVED				

MADRID ARROYO
GRADING PLAN

DRAWN	DATE	DWG. NO.	REV. NO.
C.PHILIPS	----	C204	C
SCALE	W.O. NO. 15740.001.003	SHT. 54 of 83	

C:\Users\walters\Weston Solutions, Inc\Engineering Community - AutoCAD\Projects\MADRID STORMWATER\RIVERBEND 100% FINAL.dwg October 30, 2024 - 11:44am

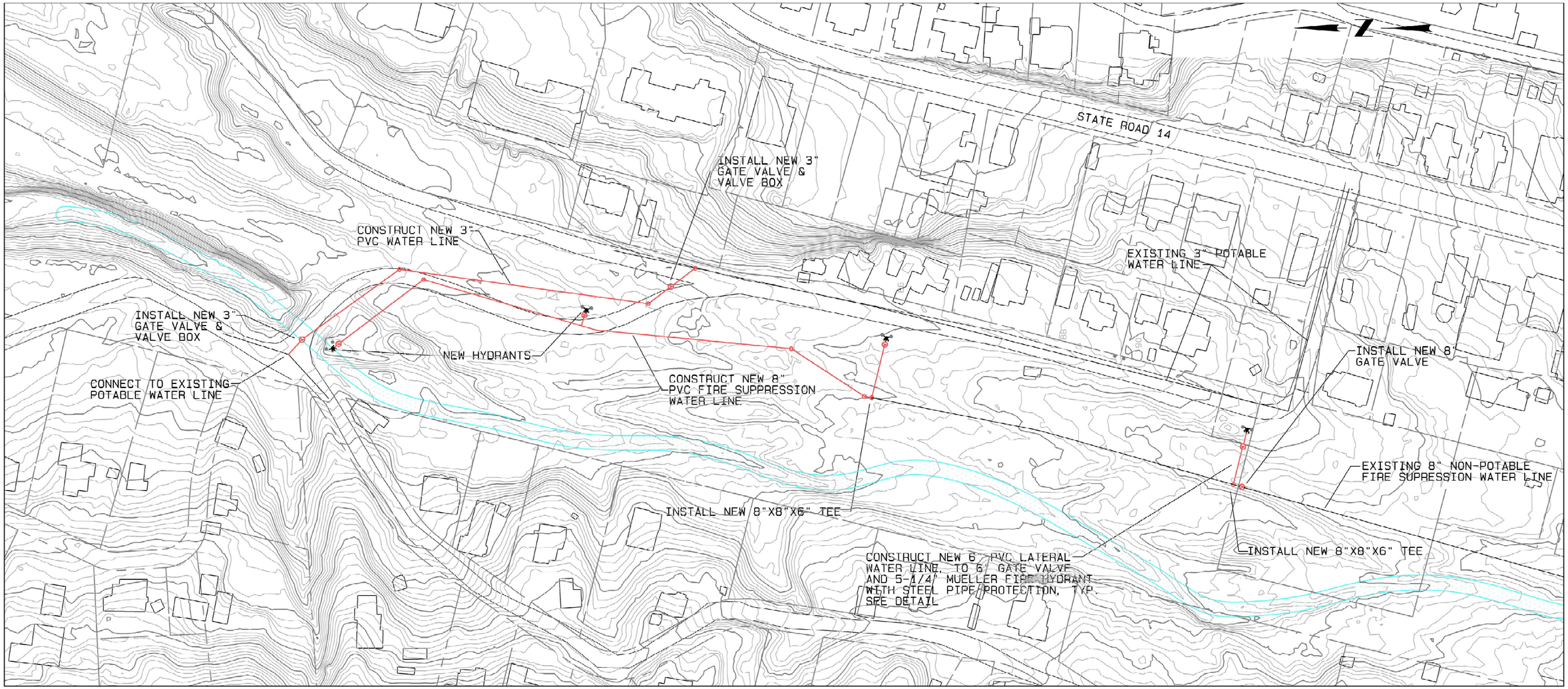

0 50' 100' 200'

UPDATED 3-15-2025

CHRISTOPHER S. PHILIPS NEW MEXICO 21824 REGISTERED PROFESSIONAL ENGINEER 7-1-24

NO.	DATE	APPR.	REVISION	NO.	DATE	APPR.	REVISION
B	11/4/24		100% FINAL				
C	3/27/25		FOR-BID				

VILLAGE OF MADRID, NM
STORM WATER & EROSION CONTROL PROJECT

MADRID NEW MEXICO

RIVERBEND ENGINEERING, LLC

ALBUQUERQUE NEW MEXICO

	CHECKED	DATE	CLIENT APPROVALS	DATE
	CP	10/31/24		
DES. ENG.	CP	10/31/24		
PROJ. ENG.	CP	10/31/24		
PROJ. MGR.	RE	10/31/24		
APPROVED				
APPROVED				

MADRID ARROYO
WATER UTILITIES PLAN

DRAWN	DATE	DWG. NO.	REV. NO.
C.PHILIPS	----	C205	C
SCALE	W.O. NO. 15740.001.003	SHT. 55 of 83	

C:\Users\walers\Weston Solutions, Inc\Engineering Community - AutoCAD\Projects\MADRID STORMWATER\RIVERBEND 100% FINAL.dwg October 30, 2024 - 11:44am

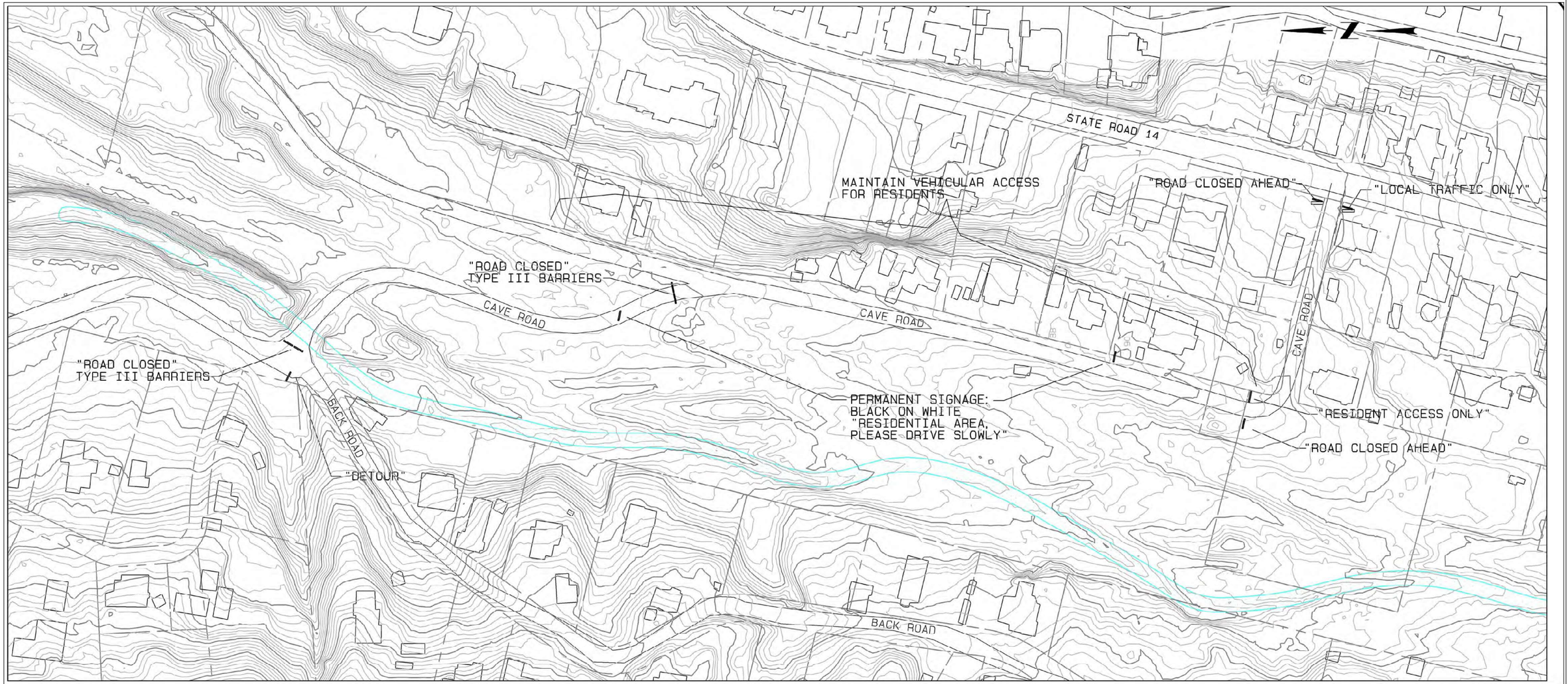

NOTE: THE CONTRACTOR MUST MAINTAIN ACCESS FOR RESIDENTS ALONG CAVE ROAD, AS SHOWN. INTERUPTIONS IN VEHICULAR ACCESS MAY BE NECESSITATED BY CONSTRUCTION, BUT MUST BE LIMITED TO "DAY OF" CONSTRUCTION, AND WRITTEN/VERBAL NOTIFICATION MUST BE PROVIDED TO RESIDENTS PRIOR TO ACCESS DISRUPTIONS. SIMILARLY, RESIDENT PARKING PATTERNS MAY BECOME ALTERED DURING CONSTRUCTION AND AFTER CAVE ROAD IS COMPLETED. THE CONTRACTOR IS EXPECTED TO COMMUNICATE NEEDED CHANGES WITH THE RESIDENTS IN A FRIENDLY AND HELPFULL MANNER.

0 50' 100' 200'

CHRISTOPHER S. PHILIPS
NEW MEXICO
14824
REGISTERED PROFESSIONAL ENGINEER
7-1-24

NO.	DATE	APPR.	REVISION	NO.	DATE	APPR.	REVISION
B	11/4/24		100% FINAL				
C	3/27/25		FOR-BID				

VILLAGE OF MADRID, NM
STORM WATER & EROSION CONTROL PROJECT

MADRID NEW MEXICO

RIVERBEND ENGINEERING, LLC

ALBUQUERQUE NEW MEXICO

CHECKED	CP	10/31/24	CLIENT APPROVALS	DATE
DES. ENG.	CP	10/31/24		
PROJ. ENG.	CP	10/31/24		
PROJ. MGR.	RE	10/31/24		
APPROVED				
APPROVED				

MADRID ARROYO
TRAFFIC CONTROL PLAN

DRAWN	DATE	DWG. NO.	REV. NO.
C.PHILIPS	---	C206	C
SCALE	W.O. NO. 15740.001.003	SHT. 56 of 83	

C:\Users\walters\Vendor Solutions, Inc\Engineering Community - AutoCAD\Projects\MADRID STORMWATER\RIVERBEND 100% FINAL.dwg, October 30, 2024 - 11:44am

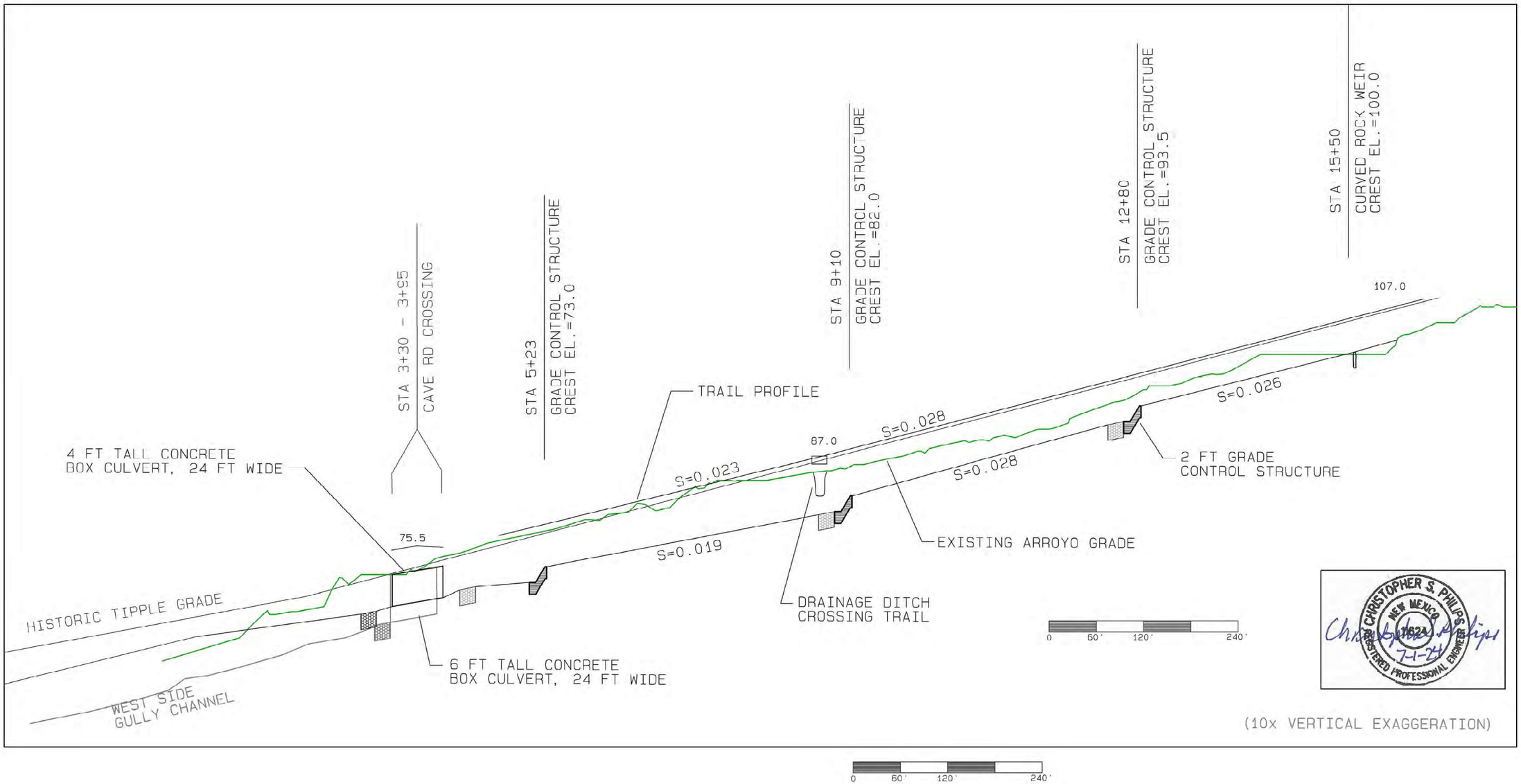

CHRISTOPHER S. PHILIPS
NEW MEXICO
17624
REGISTERED PROFESSIONAL ENGINEER
7-1-24

NO.	DATE	APPR.	REVISION	NO.	DATE	APPR.	REVISION
B	11/4/24		100% FINAL				
C	3/27/25		FOR-BID				

VILLAGE OF MADRID, NM
STORM WATER & EROSION CONTROL PROJECT

MADRID NEW MEXICO

RIVERBEND ENGINEERING, LLC

ALBUQUERQUE NEW MEXICO

CHECKED	CP	DATE 10/31/24	CLIENT APPROVALS	DATE
DES. ENG.	CP	10/31/24		
PROJ. ENG.	CP	10/31/24		
PROJ. MGR.	RE	10/31/24		
APPROVED				
APPROVED				

MADRID ARROYO
ARROYO AND TRAIL PROFILES

DRAWN	DATE	DWG. NO.	REV. NO.
C.PHILIPS	----	C207	C
SCALE	W.O. NO. 15740.001.003	SHT. 57 of 83	

C:\Users\swiers\Weston Solutions, Inc\Engineering Community - AutoCAD\Projects\MADRID STORMWATER\RIVERBEND 100% FINAL.dwg October 30, 2024 - 11:44am

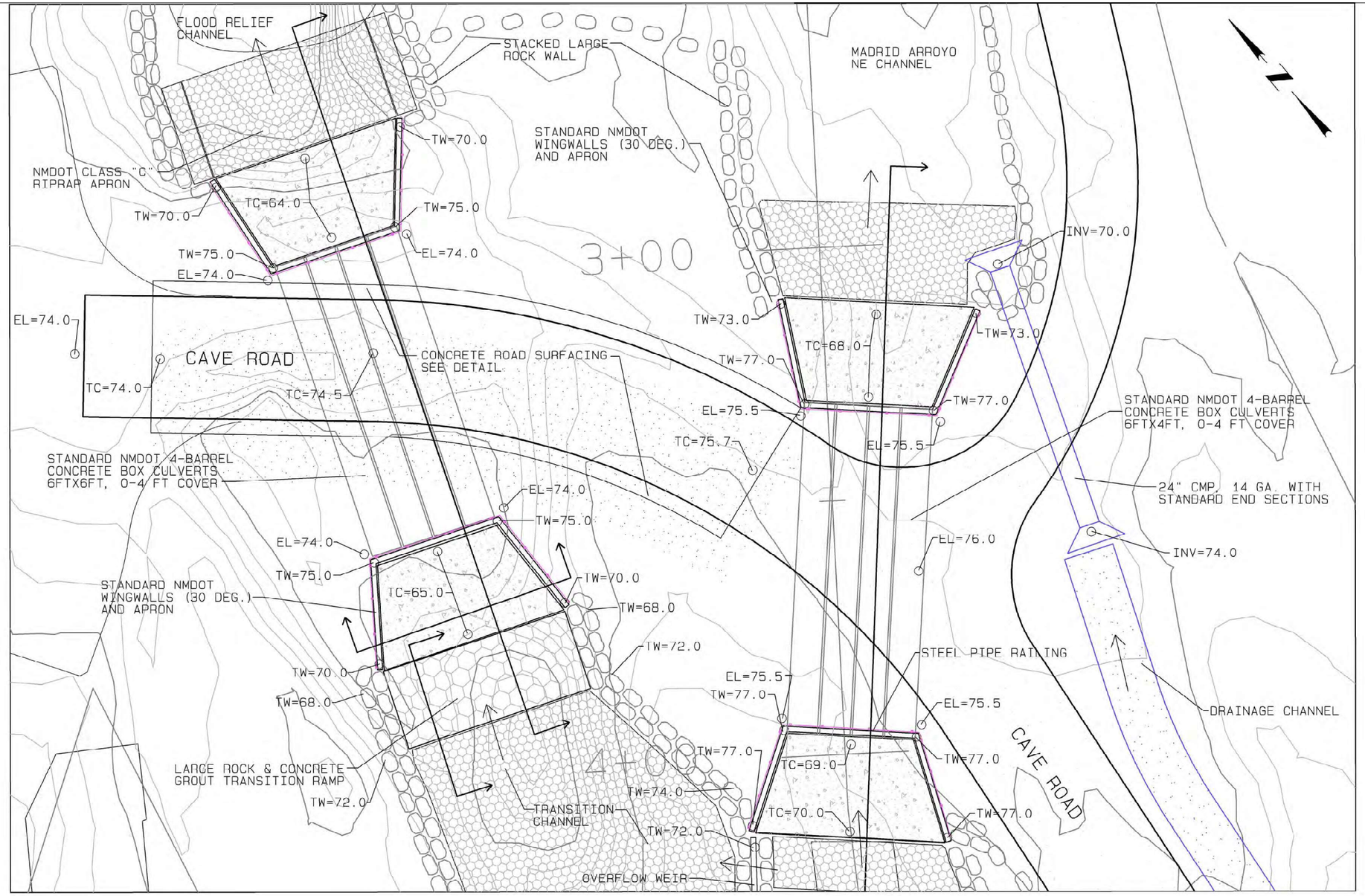

CHRISTOPHER S. PHILIPS NEW MEXICO 15922 REGISTERED PROFESSIONAL ENGINEER
7-1-24

NO.	DATE	APPR.	REVISION	NO.	DATE	APPR.	REVISION
B	11/4/24		100% FINAL				
C	3/27/25		FOR-BID				

VILLAGE OF MADRID, NM
STORM WATER & EROSION CONTROL PROJECT

MADRID NEW MEXICO

RIVERBEND ENGINEERING, LLC

ALBUQUERQUE NEW MEXICO

CHECKED	CP	DATE 10/31/24	CLIENT APPROVALS / DATE
DES. ENG.	CP	10/31/24	
PROJ. ENG.	CP	10/31/24	
PROJ. MGR.	RE	10/31/24	
APPROVED			
APPROVED			

MADRID ARROYO
SITE PLAN AND GRADING PLAN
CAVE ROAD ARROYO CROSSING

DRAWN	DATE	DWG. NO.	REV. NO.
C.PHILIPS	----	C208	C
SCALE	W.O. NO. 15740.001.003	SHT. 58 of 83	

C:\Users\walters\Weston Solutions, Inc\Engineering Community - AutoCAD\Projects\MADRID STORMWATER\RIVERBEND 100% FINAL.dwg October 30, 2024 - 11:44am

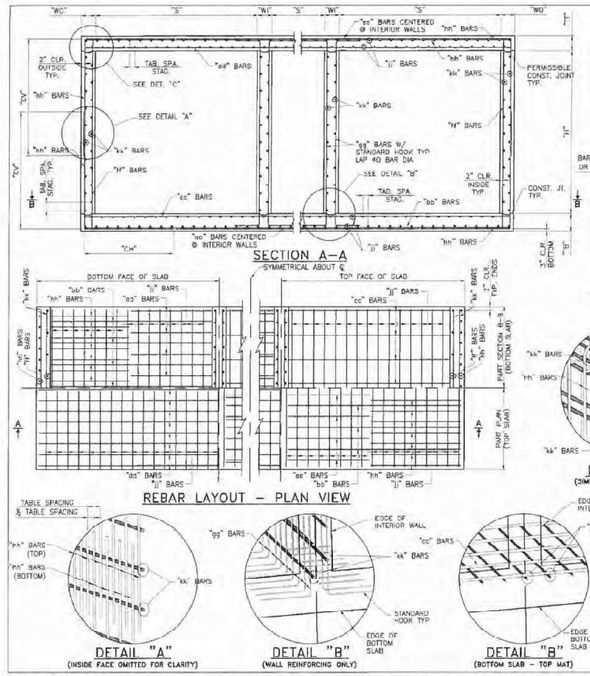

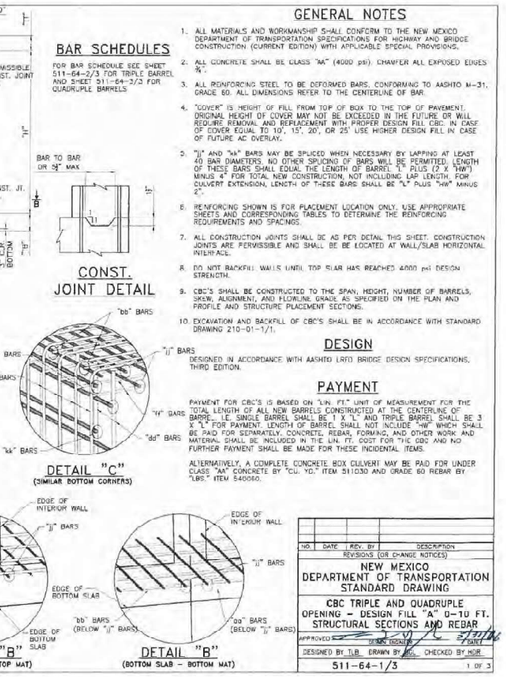

BAR SCHEDULES

FOR BAR SCHEDULE SEE SHEET 511-64-2/3 FOR TRIPLE BARREL AND SHEET 511-64-2/3 FOR QUADRUPLE BARRELS

GENERAL NOTES

1. ALL MATERIALS AND WORKMANSHIP SHALL CONFORM TO THE NEW MEXICO DEPARTMENT OF TRANSPORTATION SPECIFICATIONS FOR HIGHWAY AND BRIDGE CONSTRUCTION (CURRENT EDITION) WITH APPLICABLE SPECIAL PROVISIONS.
2. ALL CONCRETE SHALL BE CLASS "AA" (4000 psi). CHAMFER ALL EXPOSED EDGES ¾".
3. ALL REINFORCING STEEL TO BE DEFORMED BARS, CONFORMING TO AASHTO M-31, GRADE 60. ALL DIMENSIONS REFER TO THE CENTERLINE OF BAR.
4. "COVER" IS HEIGHT OF FILL FROM TOP OF BOX TO THE TOP OF PAVEMENT. ORIGINAL HEIGHT OF COVER MAY NOT BE EXCEEDED IN THE FUTURE OR WILL REQUIRE REMOVAL AND REPLACEMENT WITH PROPER DESIGN FILL CBC. IN CASE OF COVER EQUAL TO 10', 15', 20', OR 25' USE HIGHER DESIGN FILL IN CASE OF FUTURE AC OVERLAY.
5. "j)" AND "kk" BARS MAY BE SPLICED WHEN NECESSARY BY LAPPING AT LEAST 40 BAR DIAMETERS. NO OTHER SPLICING OF BARS WILL BE PERMITTED. LENGTH OF THESE BARS SHALL EQUAL THE LENGTH OF BARREL "L" PLUS (2 X "HW") MINUS 4" FOR TOTAL NEW CONSTRUCTION, NOT INCLUDING LAP LENGTH. FOR CULVERT EXTENSION, LENGTH OF THESE BARS SHALL BE "L" PLUS "HW" MINUS 2".
6. REINFORCING SHOWN IS FOR PLACEMENT LOCATION ONLY. USE APPROPRIATE SHEETS AND CORRESPONDING TABLES TO DETERMINE THE REINFORCING REQUIREMENTS AND SPACINGS.
7. ALL CONSTRUCTION JOINTS SHALL BE AS PER DETAIL THIS SHEET. CONSTRUCTION JOINTS ARE PERMISSIBLE AND SHALL BE BE LOCATED AT WALL/SLAB HORIZONTAL INTERFACE.
8. DO NOT BACKFILL WALLS UNTIL TOP SLAB HAS REACHED 4000 psi DESIGN STRENGTH.
9. CBC'S SHALL BE CONSTRUCTED TO THE SPAN, HEIGHT, NUMBER OF BARRELS, SKEW, ALIGNMENT, AND FLOWLINE GRADE AS SPECIFIED ON THE PLAN AND PROFILE AND STRUCTURE PLACEMENT SECTIONS.
10. EXCAVATION AND BACKFILL OF CBC'S SHALL BE IN ACCORDANCE WITH STANDARD DRAWING 210-01-1/1.

DESIGN

DESIGNED IN ACCORDANCE WITH AASHTO LRFD BRIDGE DESIGN SPECIFICATIONS, THIRD EDITION.

PAYMENT

PAYMENT FOR CBC'S IS BASED ON "LIN. FT." UNIT OF MEASUREMENT FOR THE TOTAL LENGTH OF ALL NEW BARRELS CONSTRUCTED AT THE CENTERLINE OF BARREL. I.E. SINGLE BARREL SHALL BE 1 X "L" AND TRIPLE BARREL SHALL BE 3 X "L" FOR PAYMENT. LENGTH OF BARREL SHALL NOT INCLUDE "HW" WHICH SHALL BE PAID FOR SEPARATELY. CONCRETE, REBAR, FORMING, AND OTHER WORK AND MATERIAL SHALL BE INCLUDED IN THE LIN. FT. COST FOR THE CBC AND NO FURTHER PAYMENT SHALL BE MADE FOR THESE INCIDENTAL ITEMS.

ALTERNATIVELY, A COMPLETE CONCRETE BOX CULVERT MAY BE PAID FOR UNDER CLASS "AA" CONCRETE BY "CU. YD." ITEM 511030 AND GRADE 60 REBAR BY "LBS." ITEM 540060.

NO.	DATE	REV. BY	DESCRIPTION
			REVISIONS (OR CHANGE NOTICES)

NEW MEXICO
DEPARTMENT OF TRANSPORTATION
STANDARD DRAWING

CBC TRIPLE AND QUADRUPLE OPENING – DESIGN FILL "A" 0-10 FT. STRUCTURAL SECTIONS AND REBAR

APPROVED: BENJ. GOMEZ — 7/27/16 DATE

DESIGNED BY TLB DRAWN BY CHECKED BY HDR

511-64-1/3 1 OF 3

NMDOT CBC SHEET 129

QUADRUPLE OPENING BOX CULVERT STRUCTURE DIMENSIONS							GRADE 60 REINFORCING BAR SCHEDULE (BAR SIZE, SPACING AND LENGTH DIMENSIONS)																											
DIM	0-10 FT BURIAL DESIGN FILL "A"						"aa"	"ee"	"aa" & "ee"	"bb"	"cc"	"dd"	"bb" & "cc" & "dd"	"ff"	"gg"	"ff" & "gg" **	"hh"				"jj"	"kk"										
SPAN "S" INSIDE	HEIGHT "H" INSIDE	TOP SLAB "TT"	BOTTOM SLAB	WALLS OUTER "WO"	WALLS INTERIOR "WI"		SIZE	SPACING	SIZE	SPACING	SIZE	SPACING	SIZE	SPACING	SIZE	SPACING	SIZE	SPACING	LENGTH	SIZE	SPACING	SIZE	SPACING	LENGTH	SIZE	SPACING	"OH" LENGTH	"OV" LENGTH	SIZE	STAGGERED SPACING	SIZE	STAGGERED SPACING
4'	2'	7.5"	8.5"	7.5"	6.0"		#4	12"	#5	12"	#4	6"	#4	6"	#5	12"	1'-8"-5"	#4	6"	#4	12"	2'-11"	#4	6"	24"	25"	#4	6"	#4	6"
4'	3'	7.5"	8.5"	7.5"	6.0"		#4	12"	#5	12"	3'-0"	3	#5	12"	#4	6"	#4	6"	1'-8"-2"	#4	6"	#4	12"	3'-11"	#4	6"	24"	31"	#4	6"	#4	6"
4'	4'	7.5"	8.5"	7.5"	6.0"		#4	12"	#5	12"	5'-0"	3	#5	12"	#4	6"	#4	6"	1'-8"-0"	#4	6"	#4	12"	4'-11"	#4	6"	24"	37"	#4	6"	#4	6"
5'	2'	8.0"	8.5"	7.5"	6.0"		#5	12"	#7	12"	7'-5"	3	#7	12"	#6	6"	#5	6"	2'-6"-5"	#5	6"	#4	12"	2'-11"	#5	6"	30"	27"	#4	6"	#4	6"
5'	3'	8.0"	8.5"	7.5"	6.0"		#5	12"	#7	12"	7'-0"	3	#7	12"	#6	6"	#5	6"	2'-6"-2"	#5	6"	#4	12"	3'-11"	#5	6"	30"	35"	#4	6"	#4	6"
5'	4'	8.0"	8.5"	7.5"	6.0"		#5	12"	#7	12"	7'-5"	3	#7	12"	#6	6"	#5	6"	2'-6"-0"	#5	6"	#4	12"	4'-11"	#5	6"	30"	39"	#4	6"	#4	8"
5'	5'	8.0"	8.5"	7.5"	6.0"		#5	12"	#7	12"	7'-5"	3	#7	12"	#6	6"	#5	6"	2'-6"-5"	#5	6"	#4	12"	5'-11"	#5	6"	30"	45"	#4	6"	#4	8"
5'	6'	8.0"	8.5"	7.5"	6.0"		#5	12"	#7	12"	7'-5"	3	#7	12"	#6	6"	#5	6"	2'-6"-0"	#5	6"	#4	12"	6'-11"	#5	6"	30"	51"	#4	6"	#4	8"
5'	7'	8.0"	8.5"	7.5"	6.0"		#5	12"	#7	12"	7'-5"	3	#7	12"	#6	6"	#5	6"	2'-2"-5"	#5	6"	#4	12"	7'-11"	#5	6"	30"	57"	#4	6"	#4	8"
8'	4'	9.5"	9.0"	7.5"	6.0"		#7	12"	#7	12"	8'-5"	3	#7	12"	#5	6"	#5	6"	3'-4"-5"	#5	6"	#4	12"	4'-11"	#6	6"	36"	41"	#4	6"	#4	8"
8'	5'	9.5"	9.0"	7.5"	6.0"		#7	12"	#7	12"	8'-5"	3	#7	12"	#5	6"	#5	6"	3'-4"-0"	#5	6"	#4	12"	6'-11"	#6	6"	36"	47"	#4	6"	#4	8"
8'	6'	9.5"	9.0"	7.5"	6.0"		#7	12"	#7	12"	8'-5"	3	#7	12"	#5	6"	#5	6"	3'-4"-5"	#5	6"	#4	12"	7'-11"	#6	6"	36"	53"	#4	6"	#4	8"
8'	7'	9.5"	9.0"	7.5"	6.0"		#7	12"	#7	12"	8'-5"	3	#7	12"	#5	6"	#5	6"	3'-4"-0"	#5	6"	#4	12"	8'-11"	#6	6"	36"	59"	#4	6"	#4	8"
8'	8'	9.5"	9.0"	7.5"	6.0"		#7	12"	#7	12"	8'-5"	3	#7	12"	#5	6"	#5	6"	3'-4"-5"	#5	6"	#4	12"	9'-11"	#6	6"	36"	65"	#4	6"	#4	8"
10'	3'	11.0"	10.5"	7.5"	6.0"		#8	12"	#7	12"	10'-9"	3	#8	12"	#6	6"	#6	6"	4'-2"-5"	#6	6"	#4	12"	4'-4"	#6	6"	38"	37"	#4	6"	#4	8"
10'	4'	11.0"	10.5"	7.5"	6.0"		#8	12"	#7	12"	10'-9"	3	#8	12"	#6	6"	#6	6"	4'-2"-0"	#6	6"	#4	12"	5'-4"	#6	6"	38"	43"	#4	6"	#4	8"
10'	5'	11.0"	10.5"	7.5"	6.0"		#8	12"	#7	12"	10'-9"	3	#8	12"	#6	6"	#6	6"	4'-2"-5"	#6	6"	#4	12"	6'-4"	#6	6"	38"	49"	#4	6"	#4	8"
10'	6'	11.0"	10.5"	7.5"	6.0"		#8	12"	#7	12"	10'-9"	3	#8	12"	#6	6"	#6	6"	4'-2"-0"	#6	6"	#4	12"	7'-4"	#6	6"	38"	55"	#4	6"	#4	8"
* 10'	7'	11.0"	10.5"	7.5"	6.0"		#8	12"	#7	12"	10'-9"	3	#8	12"	#6	6"	#6	6"	4'-2"-5"	#6	6"	#4	12"	8'-4"	#6	6"	38"	61"	#4	6"	#4	8"
10'	8'	11.0"	10.5"	9.0"	6.0"		#8	12"	#7	12"	10'-10"	3	#8	12"	#6	6"	#6	6"	4'-2"-0"	#6	6"	#4	12"	9'-4"	#7	6"	45"	69"	#4	6"	#4	8"
10'	9'	11.0"	10.5"	9.0"	6.0"		#8	12"	#7	12"	10'-10"	3	#8	12"	#6	6"	#6	6"	4'-2"-8"	#6	6"	#4	12"	10'-4"	#7	6"	45"	75"	#4	6"	#4	8"
10'	10'	11.0"	10.5"	9.0"	6.0"		#8	12"	#7	12"	10'-10"	3	#8	12"	#6	6"	#6	6"	4'-2"-8"	#6	6"	#4	12"	11'-4"	#7	6"	45"	81"	#4	6"	#4	8"
10'	11'	11.0"	10.5"	9.0"	6.0"		#8	12"	#7	12"	10'-10"	3	#8	12"	#6	6"	#6	6"	4'-2"-8"	#6	6"	#4	12"	12'-4"	#7	6"	45"	87"	#4	6"	#4	8"
10'	12'	11.0"	10.5"	9.0"	6.0"		#8	12"	#7	12"	10'-10"	3	#8	12"	#6	6"	#6	6"	4'-2"-8"	#6	6"	#4	12"	13'-4"	#7	6"	45"	93"	#4	6"	#4	8"
12'	8'	12.5"	12.0"	9.0"	6.0"		#8	12"	#8	12"	11'-10"	3	#8	12"	#6	6"	#7	6"	5'-2"-5"	#7	6"	#4	12"	7'-7"	#8	6"	55"	63"	#4	6"	#4	8"
12'	7'	12.5"	12.0"	9.0"	6.0"		#8	12"	#8	12"	11'-10"	3	#8	12"	#6	6"	#7	6"	5'-2"-0"	#7	6"	#4	12"	8'-7"	#8	6"	55"	69"	#4	6"	#4	8"
12'	8'	12.5"	12.0"	9.0"	6.0"		#8	12"	#8	12"	11'-10"	3	#8	12"	#6	6"	#7	6"	5'-2"-5"	#7	6"	#4	12"	9'-7"	#8	6"	55"	75"	#4	6"	#4	8"
12'	9'	12.5"	12.0"	9.0"	6.0"		#8	12"	#8	12"	11'-10"	3	#8	12"	#6	6"	#7	6"	5'-2"-8"	#7	6"	#4	12"	10'-7"	#8	6"	55"	81"	#4	6"	#4	8"
12'	10'	12.5"	12.0"	9.0"	6.0"		#8	12"	#8	12"	11'-10"	3	#8	12"	#6	6"	#7	6"	5'-2"-8"	#7	6"	#4	12"	11'-7"	#8	6"	55"	87"	#4	6"	#4	8"
12'	12'	12.5"	12.0"	9.0"	6.0"		#8	12"	#8	12"	11'-10"	3	#8	12"	#6	6"	#7	6"	5'-2"-8"	#7	6"	#4	12"	13'-7"	#8	6"	55"	99"	#4	6"	#4	8"
14'	8'	14.0"	13.0"	11.0"	7.0"		#9	12"	#8	12"	14'-4"	3	#9	12"	#7	6"	#7	6"	6'-2"-5"	#7	6"	#4	12"	9'-10"	#8	6"	60"	76"	#4	6"	#4	8"
14'	9'	14.0"	13.0"	11.0"	7.0"		#9	12"	#8	12"	14'-4"	3	#9	12"	#7	6"	#7	6"	6'-2"-0"	#7	6"	#4	12"	10'-10"	#8	6"	60"	82"	#4	6"	#4	8"
14'	10'	14.0"	13.0"	11.0"	7.0"		#9	12"	#8	12"	14'-4"	3	#9	12"	#7	6"	#7	6"	6'-2"-5"	#7	6"	#4	12"	11'-10"	#8	6"	60"	88"	#4	6"	#4	8"
14'	11'	14.0"	13.0"	11.0"	7.0"		#9	12"	#8	12"	14'-4"	3	#9	12"	#7	6"	#7	6"	6'-2"-0"	#7	6"	#4	12"	12'-10"	#8	6"	60"	94"	#4	6"	#4	8"
14'	12'	14.0"	13.0"	11.0"	7.0"		#9	12"	#8	12"	14'-4"	3	#9	12"	#7	6"	#7	6"	6'-2"-5"	#7	6"	#4	12"	13'-10"	#8	6"	60"	100"	#4	6"	#4	8"
14'	13'	14.0"	13.0"	11.0"	7.0"		#9	12"	#8	12"	14'-4"	3	#9	12"	#7	6"	#7	6"	6'-2"-8"	#7	6"	#4	12"	14'-10"	#8	6"	60"	106"	#4	6"	#4	8"
14'	14'	14.0"	13.0"	11.0"	7.0"		#9	12"	#8	12"	14'-4"	3	#9	12"	#7	6"	#7	6"	6'-2"-8"	#7	6"	#4	12"	15'-10"	#8	6"	60"	112"	#4	6"	#4	8"

FOR EXTENSIONS OF EXISTING CBC'S OF S=6', S=7', AND S=9' SIZE SPANS NOT INCLUDED IN THIS TABLE, USE DIMENSIONS FOR NEXT GREATER SPAN TO BUILD. FOR EXAMPLE: FOR S=5' USE DESIGN DIMENSIONS FROM THE TABLE FOR S=6'. ALSO REDUCE THE S=6' TABLE LENGTH OF BARS "bb", "cc" AND "dd" BY ONE FOOT TO ACCOMMODATE THE SMALLER SPAN. SEE DETAILS ON SHEET 511-66-4/6. ANY OTHER SIZES OF BOX EXTENSIONS NOT COVERED BY THIS MODIFICATION SHALL BE DONE THROUGH SPECIAL DESIGNS INCLUDED IN THE PROJECT PLANS.

** TOTAL LENGTH OF "gg" BARS IS TABLE LENGTH PLUS TWO STANDARD 90° HOOKS AND OPTIONAL 40 BAR ø LAP IF NECESSARY.

* EXAMPLE OF USE OF THIS TABLE:
PROPOSED STRUCTURE – QUADRUPLE BARREL, 10 FT. SPAN/7 FT. HEIGHT, CBC WITH 2 FT. DEPTH OF COVER.
USE THE FOLLOWING BUILD INFORMATION FROM THE TABLE ABOVE:

DIM	0-10 FT BURIAL DESIGN FILL "A"						"aa"	"ee"	"aa" & "ee"	"bb"	"cc"	"dd"	"bb" & "cc" & "dd"	"ff"	"gg"	"ff" & "gg"	"hh"				"jj"	"kk"										
SPAN "S" INSIDE	HEIGHT "H" INSIDE	TOP SLAB "TT"	BOTTOM SLAB	WALLS OUTER "WO"	WALLS INTERIOR "WI"		SIZE	SPACING	SIZE	SPACING	SIZE	SPACING	SIZE	SPACING	SIZE	SPACING	SIZE	SPACING	LENGTH	SIZE	SPACING	SIZE	SPACING	LENGTH	SIZE	SPACING	"OH" LENGTH	"OV" LENGTH	SIZE	STAGGERED SPACING	SIZE	STAGGERED SPACING
10'	7'	11.0"	10.5"	7.5"	6.0"		#8	12"	#7	12"	10'-9"	3	#8	12"	#6	6"	#6	6"	4'-2"-5"	#6	6"	#4	12"	8'-4"	#6	6"	38"	61"	#4	6"	#4	8"

NO.	DATE	REV. BY	DESCRIPTION
			REVISIONS (OR CHANGE NOTICES)

NEW MEXICO
DEPARTMENT OF TRANSPORTATION
STANDARD DRAWING

CONCRETE BOX CULVERT QUADRUPLE OPENING – DESIGN FILL "A" 0-10 FT. DIMENSIONS AND REBAR SCHEDULE

APPROVED: BENJ. GOMEZ — Aug 8, 07 DATE

DESIGNED BY TLB DRAWN BY SGL CHECKED BY HDR

511-64-3/3 3 OF 3

NMDOT CBC SHEET 131

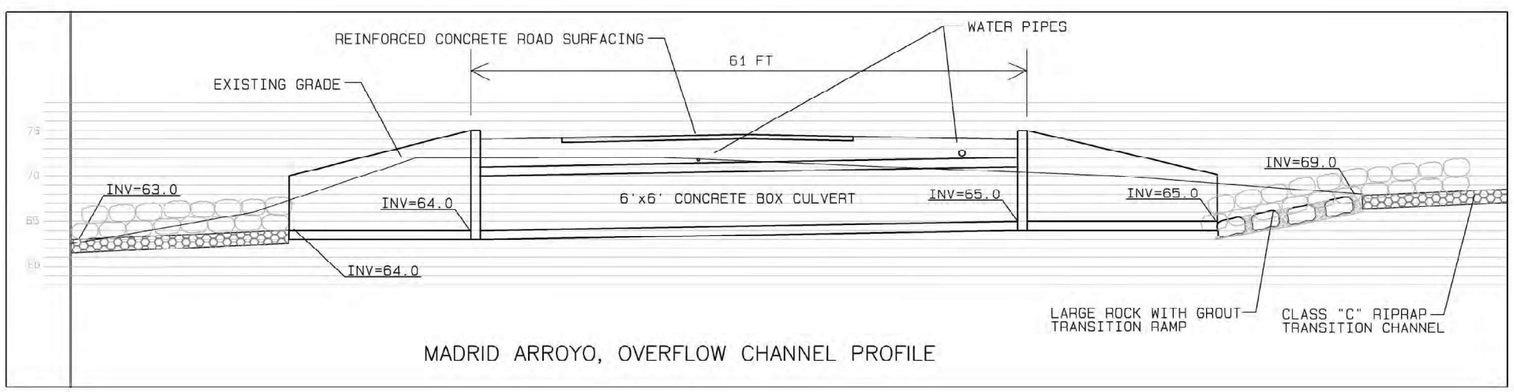

0 50' 100' 200'

CHRISTOPHER S. PHILIPS NEW MEXICO 21624 REGISTERED PROFESSIONAL ENGINEER 7-1-24

NO.	DATE	APPR.	REVISION	NO.	DATE	APPR.	REVISION
B	11/4/24		100% FINAL				
C	3/27/25		FOR-BID				

VILLAGE OF MADRID, NM
STORM WATER & EROSION CONTROL PROJECT

MADRID NEW MEXICO

RIVERBEND ENGINEERING, LLC

ALBUQUERQUE NEW MEXICO

CHECKED	CP	DATE 10/31/24	CLIENT APPROVALS / DATE
DES. ENG.	CP	10/31/24	
PROJ. ENG.	CP	10/31/24	
PROJ. MGR.	RE	10/31/24	
APPROVED			
APPROVED			

MADRID ARROYO
CONCRETE BOX CULVERT DETAILS

DRAWN	DATE	DWG. NO.	REV. NO.
C.PHILIPS	----	C209	C
SCALE	W.O. NO. 15740.001.003	SHT. 59 of 83	

C:\Users\waters\Weston Solutions, Inc\Engineering Community - AutoCAD\Projects\MADRID STORMWATER\RIVERBEND 100% FINAL.dwg October 30, 2024 - 11:44am

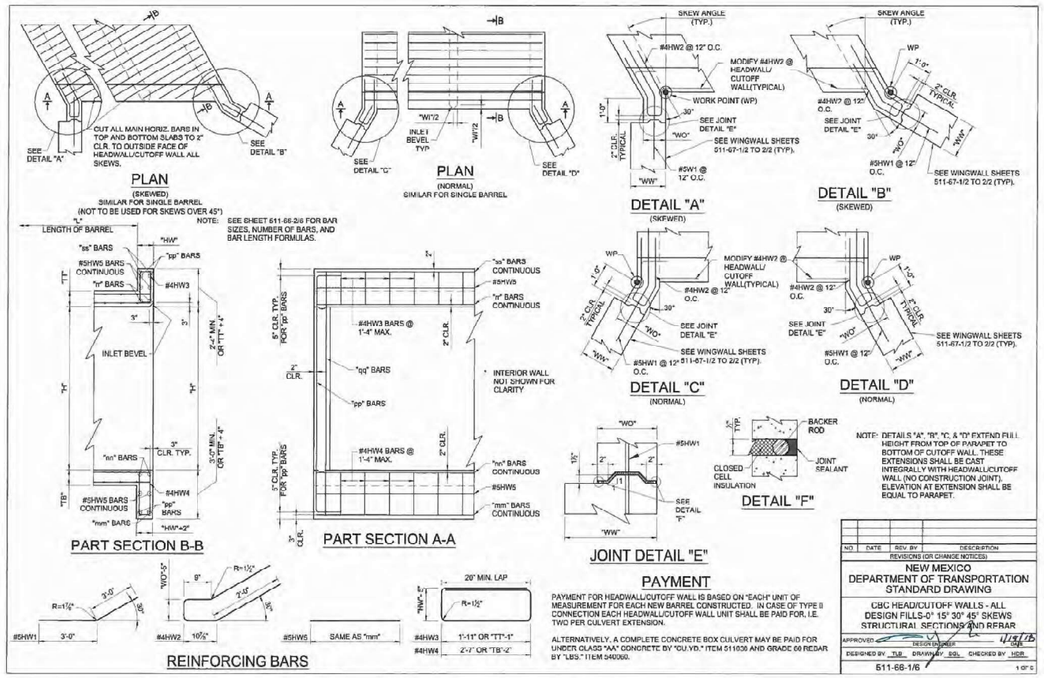

NMDOT CBC SHEET 135

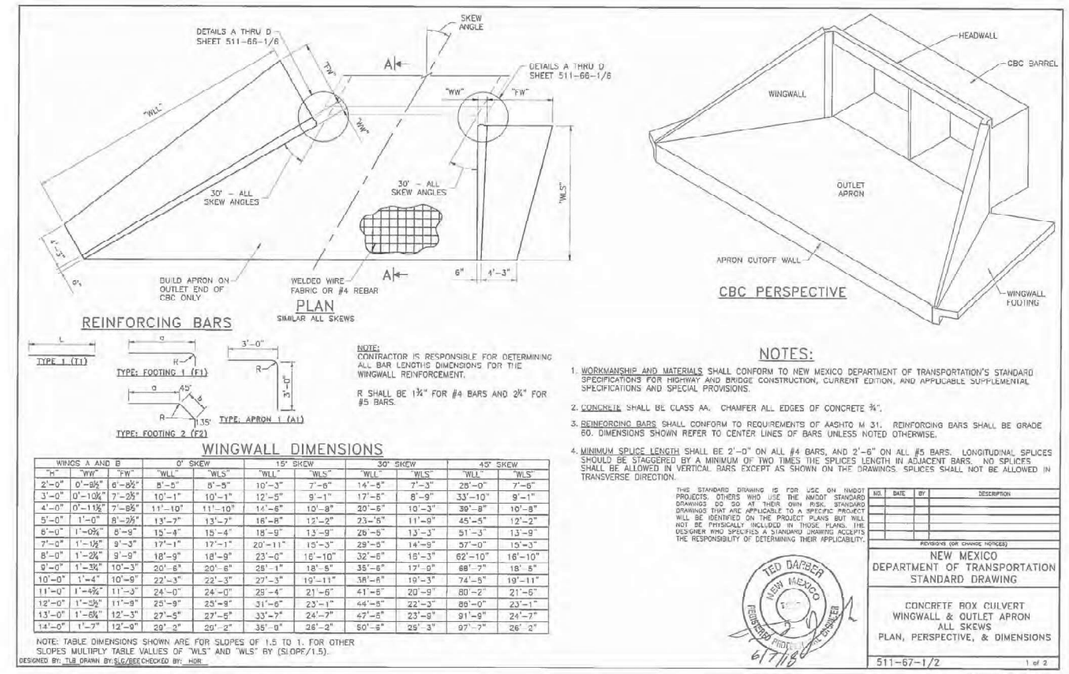

NMDOT CBC SHEET 140

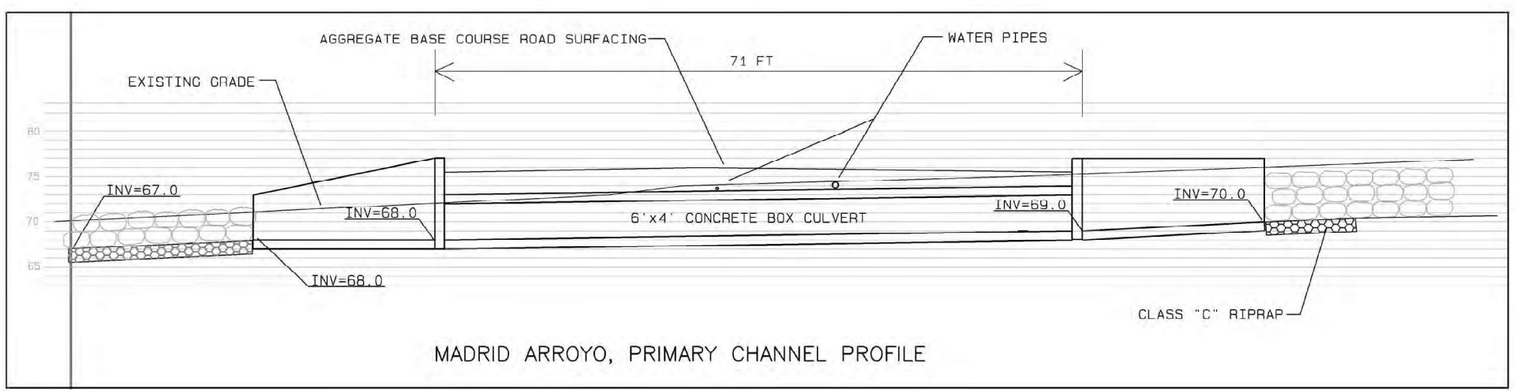

CHRISTOPHER S. PHILIPS NEW MEXICO 17624 REGISTERED PROFESSIONAL ENGINEER 7-1-24

NO.	DATE	APPR.	REVISION	NO.	DATE	APPR.	REVISION
B	11/4/24		100% FINAL				
C	3/27/25		FOR-BID				

VILLAGE OF MADRID, NM
STORM WATER & EROSION CONTROL PROJECT

MADRID NEW MEXICO

RIVERBEND ENGINEERING, LLC

ALBUQUERQUE NEW MEXICO

CHECKED	CP	10/31/24	
DES. ENG.	CP	10/31/24	
PROJ. ENG.	CP	10/31/24	
PROJ. MGR.	RE	10/31/24	
APPROVED			
APPROVED			

CLIENT APPROVALS | DATE

MADRID ARROYO
CONCRETE BOX CULVERT DETAILS

DRAWN	DATE	DWG. NO.	REV. NO.
C.PHILIPS	----	C210	C
SCALE	W.O. NO. 15740.001.003	SHT. 60 of 83	

C:\Users\weters\Weston Solutions, Inc\Engineering Community - AutoCAD\Projects\MADRID STORMWATER\RIVERBEND 100% FINAL.dwg October 30, 2024 - 11:44am

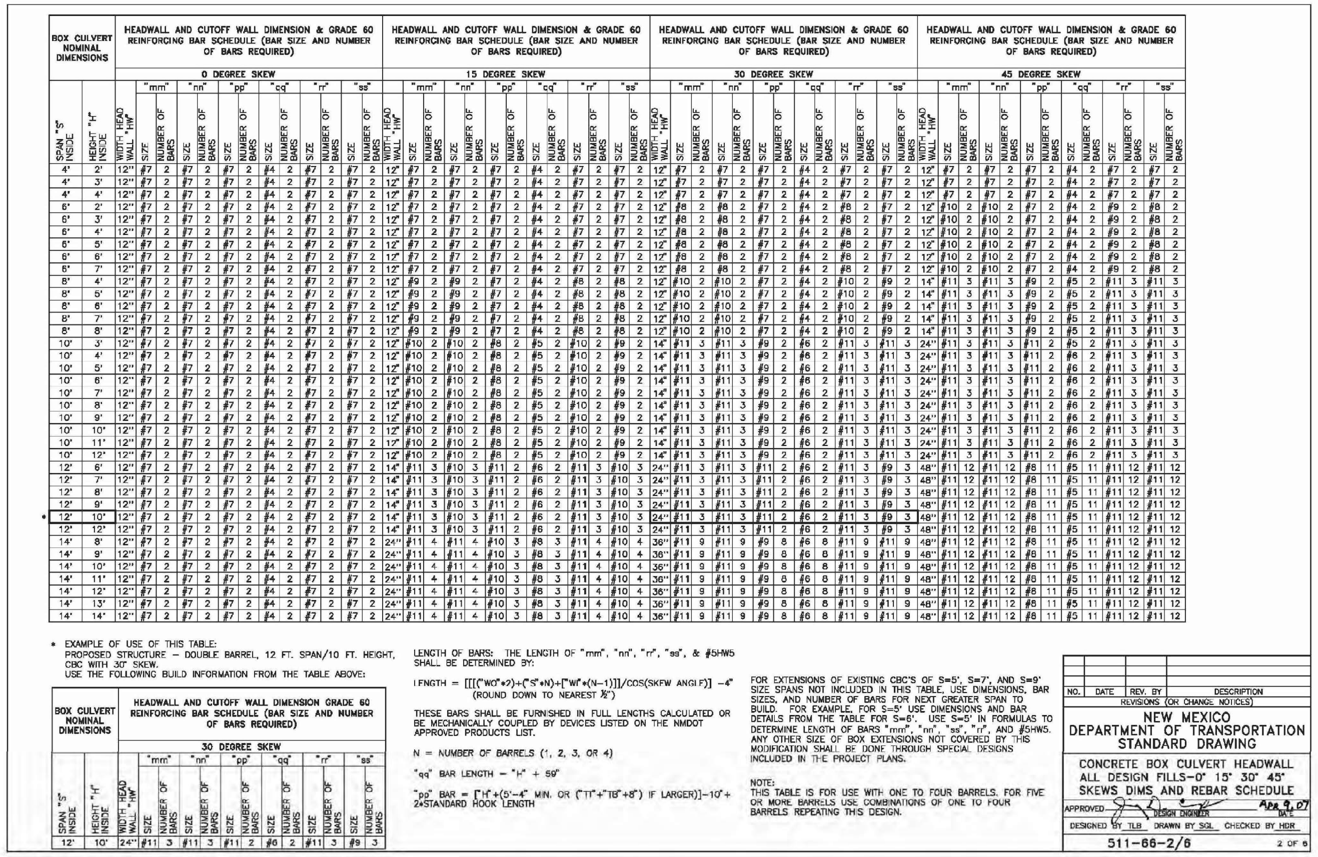

BOX CULVERT NOMINAL DIMENSIONS		HEADWALL AND CUTOFF WALL DIMENSION & GRADE 60 REINFORCING BAR SCHEDULE (BAR SIZE AND NUMBER OF BARS REQUIRED)													HEADWALL AND CUTOFF WALL DIMENSION & GRADE 60 REINFORCING BAR SCHEDULE (BAR SIZE AND NUMBER OF BARS REQUIRED)												
		0 DEGREE SKEW													15 DEGREE SKEW												
			"mm"		"nn"		"pp"		"qq"		"rr"		"ss"			"mm"		"nn"		"pp"		"qq"		"rr"		"ss"	
SPAN "S" INSIDE	HEIGHT "H" INSIDE	WIDTH HEAD WALL "HW"	SIZE	NUMBER OF BARS	SIZE	NUMBER OF BARS	SIZE	NUMBER OF BARS	SIZE	NUMBER OF BARS	SIZE	NUMBER OF BARS	SIZE	NUMBER OF BARS	WIDTH HEAD WALL "HW"	SIZE	NUMBER OF BARS	SIZE	NUMBER OF BARS	SIZE	NUMBER OF BARS	SIZE	NUMBER OF BARS	SIZE	NUMBER OF BARS	SIZE	NUMBER OF BARS
4'	2'	12"	#7	2	#7	2	#7	2	#4	2	#7	2	#7	2	12"	#7	2	#7	2	#7	2	#4	2	#7	2	#7	2
4'	3'	12"	#7	2	#7	2	#7	2	#4	2	#7	2	#7	2	12"	#7	2	#7	2	#7	2	#4	2	#7	2	#7	2
4'	4'	12"	#7	2	#7	2	#7	2	#4	2	#7	2	#7	2	12"	#7	2	#7	2	#7	2	#4	2	#7	2	#7	2
6'	2'	12"	#7	2	#7	2	#7	2	#4	2	#7	2	#7	2	12"	#7	2	#7	2	#7	2	#4	2	#7	2	#7	2
6'	3'	12"	#7	2	#7	2	#7	2	#4	2	#7	2	#7	2	12"	#7	2	#7	2	#7	2	#4	2	#7	2	#7	2
6'	4'	12"	#7	2	#7	2	#7	2	#4	2	#7	2	#7	2	12"	#7	2	#7	2	#7	2	#4	2	#7	2	#7	2
6'	5'	12"	#7	2	#7	2	#7	2	#4	2	#7	2	#7	2	12"	#7	2	#7	2	#7	2	#4	2	#7	2	#7	2
6'	6'	12"	#7	2	#7	2	#7	2	#4	2	#7	2	#7	2	12"	#7	2	#7	2	#7	2	#4	2	#7	2	#7	2
6'	7'	12"	#7	2	#7	2	#7	2	#4	2	#7	2	#7	2	12"	#7	2	#7	2	#7	2	#4	2	#7	2	#7	2
8'	4'	12"	#7	2	#7	2	#7	2	#4	2	#7	2	#7	2	12"	#9	2	#9	2	#7	2	#4	2	#8	2	#8	2
8'	5'	12"	#7	2	#7	2	#7	2	#4	2	#7	2	#7	2	12"	#9	2	#9	2	#7	2	#4	2	#8	2	#8	2
8'	6'	12"	#7	2	#7	2	#7	2	#4	2	#7	2	#7	2	12"	#9	2	#9	2	#7	2	#4	2	#8	2	#8	2
8'	7'	12"	#7	2	#7	2	#7	2	#4	2	#7	2	#7	2	12"	#9	2	#9	2	#7	2	#4	2	#8	2	#8	2
8'	8'	12"	#7	2	#7	2	#7	2	#4	2	#7	2	#7	2	12"	#9	2	#9	2	#7	2	#4	2	#8	2	#8	2
10'	3'	12"	#7	2	#7	2	#7	2	#4	2	#7	2	#7	2	12"	#10	2	#10	2	#8	2	#5	2	#10	2	#9	2
10'	4'	12"	#7	2	#7	2	#7	2	#4	2	#7	2	#7	2	12"	#10	2	#10	2	#8	2	#5	2	#10	2	#9	2
10'	5'	12"	#7	2	#7	2	#7	2	#4	2	#7	2	#7	2	12"	#10	2	#10	2	#8	2	#5	2	#10	2	#9	2
10'	6'	12"	#7	2	#7	2	#7	2	#4	2	#7	2	#7	2	12"	#10	2	#10	2	#8	2	#5	2	#10	2	#9	2
10'	7'	12"	#7	2	#7	2	#7	2	#4	2	#7	2	#7	2	12"	#10	2	#10	2	#8	2	#5	2	#10	2	#9	2
10'	8'	12"	#7	2	#7	2	#7	2	#4	2	#7	2	#7	2	12"	#10	2	#10	2	#8	2	#5	2	#10	2	#9	2
10'	9'	12"	#7	2	#7	2	#7	2	#4	2	#7	2	#7	2	12"	#10	2	#10	2	#8	2	#5	2	#10	2	#9	2
10'	10'	12"	#7	2	#7	2	#7	2	#4	2	#7	2	#7	2	12"	#10	2	#10	2	#8	2	#5	2	#10	2	#9	2
10'	11'	12"	#7	2	#7	2	#7	2	#4	2	#7	2	#7	2	12"	#10	2	#10	2	#8	2	#5	2	#10	2	#9	2
10'	12'	12"	#7	2	#7	2	#7	2	#4	2	#7	2	#7	2	12"	#10	2	#10	2	#8	2	#5	2	#10	2	#9	2
12'	6'	12"	#7	2	#7	2	#7	2	#4	2	#7	2	#7	2	14"	#11	3	#10	3	#11	2	#6	2	#11	3	#10	3
12'	7'	12"	#7	2	#7	2	#7	2	#4	2	#7	2	#7	2	14"	#11	3	#10	3	#11	2	#6	2	#11	3	#10	3
12'	8'	12"	#7	2	#7	2	#7	2	#4	2	#7	2	#7	2	14"	#11	3	#10	3	#11	2	#6	2	#11	3	#10	3
12'	9'	12"	#7	2	#7	2	#7	2	#4	2	#7	2	#7	2	14"	#11	3	#10	3	#11	2	#6	2	#11	3	#10	3
* 12'	10'	12"	#7	2	#7	2	#7	2	#4	2	#7	2	#7	2	14"	#11	3	#10	3	#11	2	#6	2	#11	3	#10	3
12'	12'	12"	#7	2	#7	2	#7	2	#4	2	#7	2	#7	2	14"	#11	3	#10	3	#11	2	#6	2	#11	3	#10	3
14'	8'	12"	#7	2	#7	2	#7	2	#4	2	#7	2	#7	2	24"	#11	4	#11	4	#10	3	#8	3	#11	4	#10	4
14'	9'	12"	#7	2	#7	2	#7	2	#4	2	#7	2	#7	2	24"	#11	4	#11	4	#10	3	#8	3	#11	4	#10	4
14'	10'	12"	#7	2	#7	2	#7	2	#4	2	#7	2	#7	2	24"	#11	4	#11	4	#10	3	#8	3	#11	4	#10	4
14'	11'	12"	#7	2	#7	2	#7	2	#4	2	#7	2	#7	2	24"	#11	4	#11	4	#10	3	#8	3	#11	4	#10	4
14'	12'	12"	#7	2	#7	2	#7	2	#4	2	#7	2	#7	2	24"	#11	4	#11	4	#10	3	#8	3	#11	4	#10	4
14'	13'	12"	#7	2	#7	2	#7	2	#4	2	#7	2	#7	2	24"	#11	4	#11	4	#10	3	#8	3	#11	4	#10	4
14'	14'	12"	#7	2	#7	2	#7	2	#4	2	#7	2	#7	2	24"	#11	4	#11	4	#10	3	#8	3	#11	4	#10	4

BOX CULVERT NOMINAL DIMENSIONS		HEADWALL AND CUTOFF WALL DIMENSION & GRADE 60 REINFORCING BAR SCHEDULE (BAR SIZE AND NUMBER OF BARS REQUIRED)													HEADWALL AND CUTOFF WALL DIMENSION & GRADE 60 REINFORCING BAR SCHEDULE (BAR SIZE AND NUMBER OF BARS REQUIRED)												
		30 DEGREE SKEW													45 DEGREE SKEW												
			"mm"		"nn"		"pp"		"qq"		"rr"		"ss"			"mm"		"nn"		"pp"		"qq"		"rr"		"ss"	
SPAN "S" INSIDE	HEIGHT "H" INSIDE	WIDTH HEAD WALL "HW"	SIZE	NUMBER OF BARS	SIZE	NUMBER OF BARS	SIZE	NUMBER OF BARS	SIZE	NUMBER OF BARS	SIZE	NUMBER OF BARS	SIZE	NUMBER OF BARS	WIDTH HEAD WALL "HW"	SIZE	NUMBER OF BARS	SIZE	NUMBER OF BARS	SIZE	NUMBER OF BARS	SIZE	NUMBER OF BARS	SIZE	NUMBER OF BARS	SIZE	NUMBER OF BARS
4'	2'	12"	#7	2	#7	2	#7	2	#4	2	#7	2	#7	2	12"	#7	2	#7	2	#7	2	#4	2	#7	2	#7	2
4'	3'	12"	#7	2	#7	2	#7	2	#4	2	#7	2	#7	2	12"	#7	2	#7	2	#7	2	#4	2	#7	2	#7	2
4'	4'	12"	#7	2	#7	2	#7	2	#4	2	#7	2	#7	2	12"	#7	2	#7	2	#7	2	#4	2	#7	2	#7	2
6'	2'	12"	#8	2	#8	2	#7	2	#4	2	#8	2	#7	2	12"	#10	2	#10	2	#7	2	#4	2	#9	2	#8	2
6'	3'	12"	#8	2	#8	2	#7	2	#4	2	#8	2	#7	2	12"	#10	2	#10	2	#7	2	#4	2	#9	2	#8	2
6'	4'	12"	#8	2	#8	2	#7	2	#4	2	#8	2	#7	2	12"	#10	2	#10	2	#7	2	#4	2	#9	2	#8	2
6'	5'	12"	#8	2	#8	2	#7	2	#4	2	#8	2	#7	2	12"	#10	2	#10	2	#7	2	#4	2	#9	2	#8	2
6'	6'	12"	#8	2	#8	2	#7	2	#4	2	#8	2	#7	2	12"	#10	2	#10	2	#7	2	#4	2	#9	2	#8	2
6'	7'	12"	#8	2	#8	2	#7	2	#4	2	#8	2	#7	2	12"	#10	2	#10	2	#7	2	#4	2	#9	2	#8	2
8'	4'	12"	#10	2	#10	2	#7	2	#4	2	#10	2	#9	2	14"	#11	3	#11	3	#9	2	#5	2	#11	3	#11	3
8'	5'	12"	#10	2	#10	2	#7	2	#4	2	#10	2	#9	2	14"	#11	3	#11	3	#9	2	#5	2	#11	3	#11	3
8'	6'	12"	#10	2	#10	2	#7	2	#4	2	#10	2	#9	2	14"	#11	3	#11	3	#9	2	#5	2	#11	3	#11	3
8'	7'	12"	#10	2	#10	2	#7	2	#4	2	#10	2	#9	2	14"	#11	3	#11	3	#9	2	#5	2	#11	3	#11	3
8'	8'	12"	#10	2	#10	2	#7	2	#4	2	#10	2	#9	2	14"	#11	3	#11	3	#9	2	#5	2	#11	3	#11	3
10'	3'	14"	#11	3	#11	3	#9	2	#6	2	#11	3	#11	3	24"	#11	3	#11	3	#11	2	#5	2	#11	3	#11	3
10'	4'	14"	#11	3	#11	3	#9	2	#6	2	#11	3	#11	3	24"	#11	3	#11	3	#11	2	#6	2	#11	3	#11	3
10'	5'	14"	#11	3	#11	3	#9	2	#6	2	#11	3	#11	3	24"	#11	3	#11	3	#11	2	#6	2	#11	3	#11	3
10'	6'	14"	#11	3	#11	3	#9	2	#6	2	#11	3	#11	3	24"	#11	3	#11	3	#11	2	#6	2	#11	3	#11	3
10'	7'	14"	#11	3	#11	3	#9	2	#6	2	#11	3	#11	3	24"	#11	3	#11	3	#11	2	#6	2	#11	3	#11	3
10'	8'	14"	#11	3	#11	3	#9	2	#6	2	#11	3	#11	3	24"	#11	3	#11	3	#11	2	#6	2	#11	3	#11	3
10'	9'	14"	#11	3	#11	3	#9	2	#6	2	#11	3	#11	3	24"	#11	3	#11	3	#11	2	#6	2	#11	3	#11	3
10'	10'	14"	#11	3	#11	3	#9	2	#6	2	#11	3	#11	3	24"	#11	3	#11	3	#11	2	#6	2	#11	3	#11	3
10'	11'	14"	#11	3	#11	3	#9	2	#6	2	#11	3	#11	3	24"	#11	3	#11	3	#11	2	#6	2	#11	3	#11	3
10'	12'	14"	#11	3	#11	3	#9	2	#6	2	#11	3	#11	3	24"	#11	3	#11	3	#11	2	#6	2	#11	3	#11	3
12'	6'	24"	#11	3	#11	3	#11	2	#6	2	#11	3	#9	3	48"	#11	12	#11	12	#8	11	#5	11	#11	12	#11	12
12'	7'	24"	#11	3	#11	3	#11	2	#6	2	#11	3	#9	3	48"	#11	12	#11	12	#8	11	#5	11	#11	12	#11	12
12'	8'	24"	#11	3	#11	3	#11	2	#6	2	#11	3	#9	3	48"	#11	12	#11	12	#8	11	#5	11	#11	12	#11	12
12'	9'	24"	#11	3	#11	3	#11	2	#6	2	#11	3	#9	3	48"	#11	12	#11	12	#8	11	#5	11	#11	12	#11	12
* 12'	10'	24"	#11	3	#11	3	#11	2	#6	2	#11	3	#9	3	48"	#11	12	#11	12	#8	11	#5	11	#11	12	#11	12
12'	12'	24"	#11	3	#11	3	#11	2	#6	2	#11	3	#9	3	48"	#11	12	#11	12	#8	11	#5	11	#11	12	#11	12
14'	8'	36"	#11	9	#11	9	#9	8	#6	8	#11	9	#11	9	48"	#11	12	#11	12	#8	11	#5	11	#11	12	#11	12
14'	9'	36"	#11	9	#11	9	#9	8	#6	8	#11	9	#11	9	48"	#11	12	#11	12	#8	11	#5	11	#11	12	#11	12
14'	10'	36"	#11	9	#11	9	#9	8	#6	8	#11	9	#11	9	48"	#11	12	#11	12	#8	11	#5	11	#11	12	#11	12
14'	11'	36"	#11	9	#11	9	#9	8	#6	8	#11	9	#11	9	48"	#11	12	#11	12	#8	11	#5	11	#11	12	#11	12
14'	12'	36"	#11	9	#11	9	#9	8	#6	8	#11	9	#11	9	48"	#11	12	#11	12	#8	11	#5	11	#11	12	#11	12
14'	13'	36"	#11	9	#11	9	#9	8	#6	8	#11	9	#11	9	48"	#11	12	#11	12	#8	11	#5	11	#11	12	#11	12
14'	14'	36"	#11	9	#11	9	#9	8	#6	8	#11	9	#11	9	48"	#11	12	#11	12	#8	11	#5	11	#11	12	#11	12

* EXAMPLE OF USE OF THIS TABLE:
PROPOSED STRUCTURE – DOUBLE BARREL, 12 FT. SPAN/10 FT. HEIGHT, CBC WITH 30° SKEW.
USE THE FOLLOWING BUILD INFORMATION FROM THE TABLE ABOVE:

BOX CULVERT NOMINAL DIMENSIONS		HEADWALL AND CUTOFF WALL DIMENSION GRADE 60 REINFORCING BAR SCHEDULE (BAR SIZE AND NUMBER OF BARS REQUIRED)												
		30 DEGREE SKEW												
			"mm"		"nn"		"pp"		"qq"		"rr"		"ss"	
SPAN "S" INSIDE	HEIGHT "H" INSIDE	WIDTH HEAD WALL "HW"	SIZE	NUMBER OF BARS	SIZE	NUMBER OF BARS	SIZE	NUMBER OF BARS	SIZE	NUMBER OF BARS	SIZE	NUMBER OF BARS	SIZE	NUMBER OF BARS
12'	10'	24"	#11	3	#11	3	#11	2	#6	2	#11	3	#9	3

LENGTH OF BARS: THE LENGTH OF "mm", "nn", "rr", "ss", & #5HW5 SHALL BE DETERMINED BY:

LENGTH = [[[("WO"*2)+("S"*N)+["WI"*(N–1)]]/COS(SKEW ANGLE)] –4"
(ROUND DOWN TO NEAREST ½")

THESE BARS SHALL BE FURNISHED IN FULL LENGTHS CALCULATED OR BE MECHANICALLY COUPLED BY DEVICES LISTED ON THE NMDOT APPROVED PRODUCTS LIST.

N = NUMBER OF BARRELS (1, 2, 3, OR 4)

"qq" BAR LENGTH = "H" + 59"

"pp" BAR = ["H"+(5'–4" MIN. OR ("TT"+"TB"+8") IF LARGER)]–10"+ 2*STANDARD HOOK LENGTH

FOR EXTENSIONS OF EXISTING CBC'S OF S=5', S=7', AND S=9' SIZE SPANS NOT INCLUDED IN THIS TABLE, USE DIMENSIONS, BAR SIZES, AND NUMBER OF BARS FOR NEXT GREATER SPAN TO BUILD. FOR EXAMPLE, FOR S=5' USE DIMENSIONS AND BAR DETAILS FROM THE TABLE FOR S=6'. USE S=5' IN FORMULAS TO DETERMINE LENGTH OF BARS "mm", "nn", "ss", "rr", AND #5HW5. ANY OTHER SIZE OF BOX EXTENSIONS NOT COVERED BY THIS MODIFICATION SHALL BE DONE THROUGH SPECIAL DESIGNS INCLUDED IN THE PROJECT PLANS.

NOTE:
THIS TABLE IS FOR USE WITH ONE TO FOUR BARRELS. FOR FIVE OR MORE BARRELS USE COMBINATIONS OF ONE TO FOUR BARRELS REPEATING THIS DESIGN.

NO.	DATE	REV. BY	DESCRIPTION

REVISIONS (OR CHANGE NOTICES)

NEW MEXICO
DEPARTMENT OF TRANSPORTATION
STANDARD DRAWING

CONCRETE BOX CULVERT HEADWALL
ALL DESIGN FILLS–0° 15° 30° 45°
SKEWS DIMS AND REBAR SCHEDULE

APPROVED DESIGN ENGINEER Apr 9, 07 DATE
DESIGNED BY TLB DRAWN BY SGL CHECKED BY HDR
511-66-2/6 2 OF 6

NMDOT CBC SHEET 136

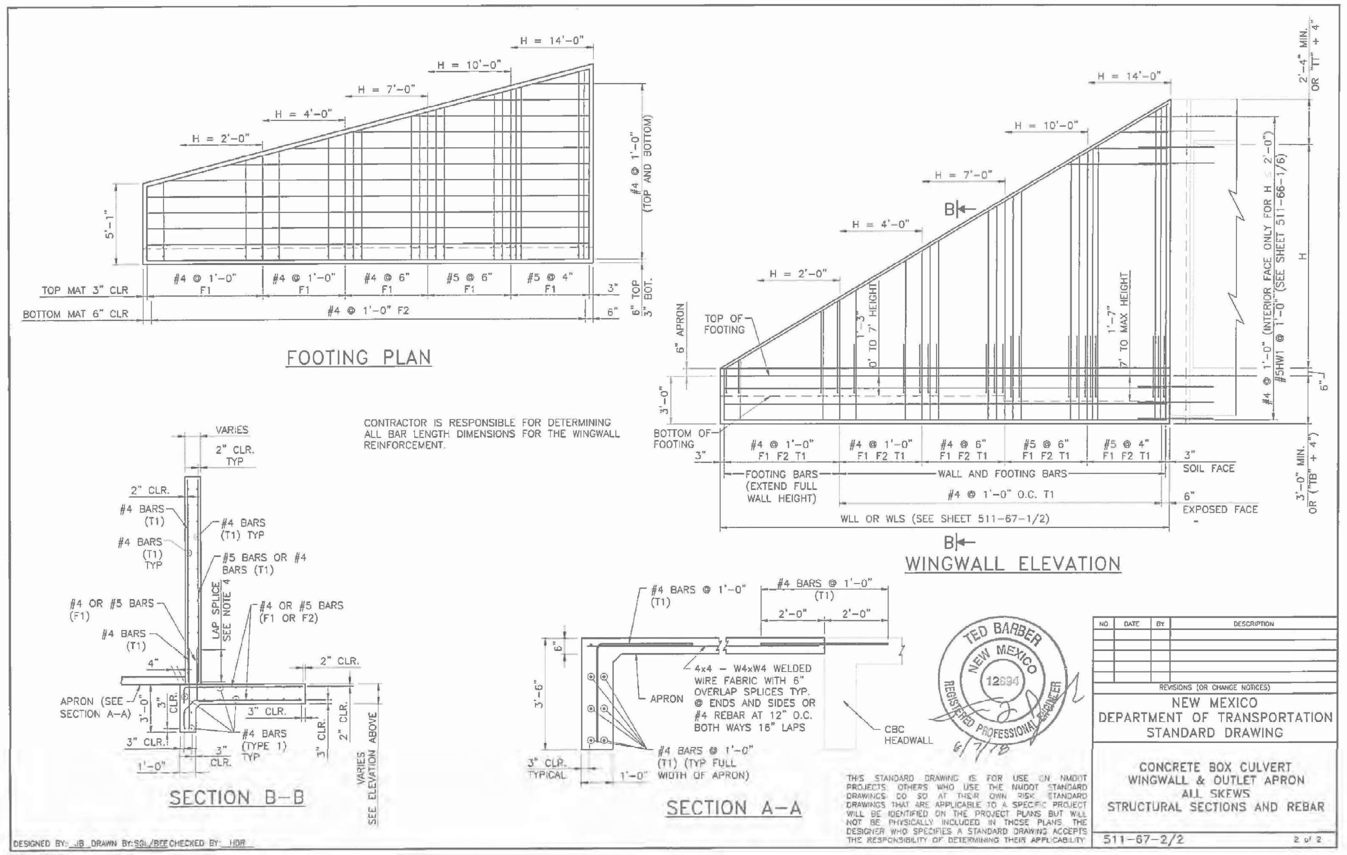

CONTRACTOR IS RESPONSIBLE FOR DETERMINING ALL BAR LENGTH DIMENSIONS FOR THE WINGWALL REINFORCEMENT.

TED BARBER NEW MEXICO 12894 REGISTERED PROFESSIONAL ENGINEER 6/7/18

THIS STANDARD DRAWING IS FOR USE ON NMDOT PROJECTS. OTHERS WHO USE THE NMDOT STANDARD DRAWINGS DO SO AT THEIR OWN RISK. STANDARD DRAWINGS THAT ARE APPLICABLE TO A SPECIFIC PROJECT WILL BE IDENTIFIED ON THE PROJECT PLANS BUT WILL NOT BE PHYSICALLY INCLUDED IN THOSE PLANS. THE DESIGNER WHO SPECIFIES A STANDARD DRAWING ACCEPTS THE RESPONSIBILITY OF DETERMINING THEIR APPLICABILITY.

NO.	DATE	BY	DESCRIPTION

REVISIONS (OR CHANGE NOTICES)

NEW MEXICO
DEPARTMENT OF TRANSPORTATION
STANDARD DRAWING

CONCRETE BOX CULVERT
WINGWALL & OUTLET APRON
ALL SKEWS
STRUCTURAL SECTIONS AND REBAR

511-67-2/2 2 of 2

DESIGNED BY: JB DRAWN BY: SGL/BEE CHECKED BY: HDR

NMDOT CBC SHEET 141

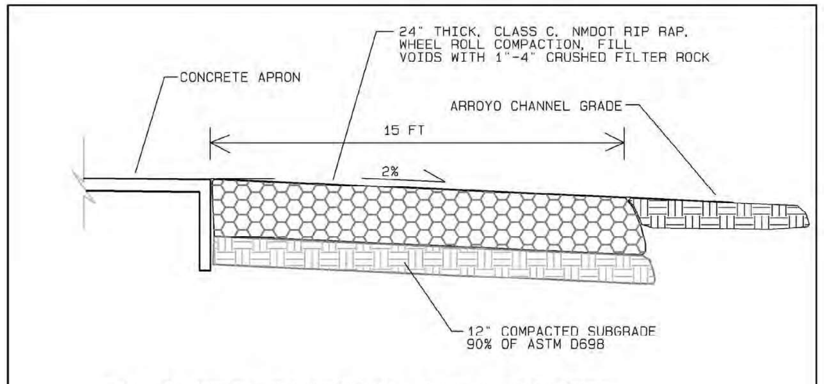

RIPRAP APRON DOWNSTREAM OF BOX CULVERTS
N.T.S.

NOTE: TOP OF PARAPET WALL AND TOP OF WING WALL MAY BE TALLER THAN THE STANDARD DETAIL SHOWS. REFER TO GRADING PLAN FOR TOP-OF-WALL ELEVATIONS. VERTICAL WALL EXTENSIONS WILL HAVE THE SAME REBAR PATTERN AS THE WALL BELOW.

CHRISTOPHER S. PHILIPS NEW MEXICO 21624 REGISTERED PROFESSIONAL ENGINEER
Christopher Philips
7-1-24

NO.	DATE	APPR.	REVISION	NO.	DATE	APPR.	REVISION
B	11/4/24		100% FINAL				
C	3/27/25		FOR-BID				

VILLAGE OF MADRID, NM
STORM WATER & EROSION CONTROL PROJECT
MADRID NEW MEXICO

RIVERBEND ENGINEERING, LLC
ALBUQUERQUE NEW MEXICO

		DATE	CLIENT APPROVALS	DATE
CHECKED	CP	10/31/24		
DES. ENG.	CP	10/31/24		
PROJ. ENG.	CP	10/31/24		
PROJ. MGR.	RE	10/31/24		
APPROVED				
APPROVED				

MADRID ARROYO
CONCRETE STRUCTURE DETAILS

DRAWN C.PHILIPS DATE ---- DWG. NO. C211 REV. NO. C
SCALE W.O. NO. 15740.001.003

C:\Users\waters\Weston Solutions, Inc\Engineering Community - AutoCAD\Projects\MADRID STORMWATER\RIVERBEND\RIVERBEND 100% FINAL.dwg October 30, 2024 • 11:44am

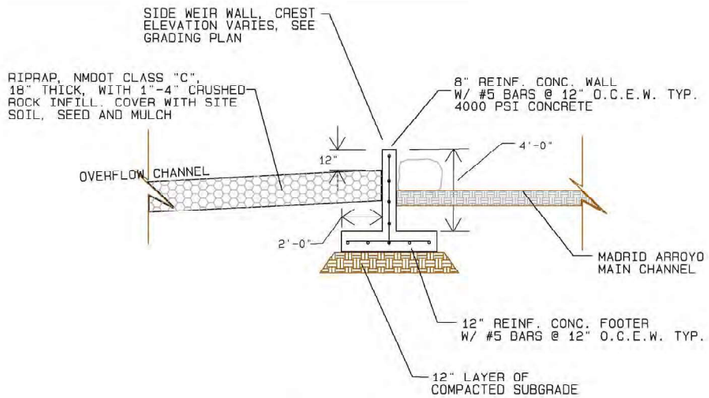

SIDE WEIR WALL
TYPICAL SECTION

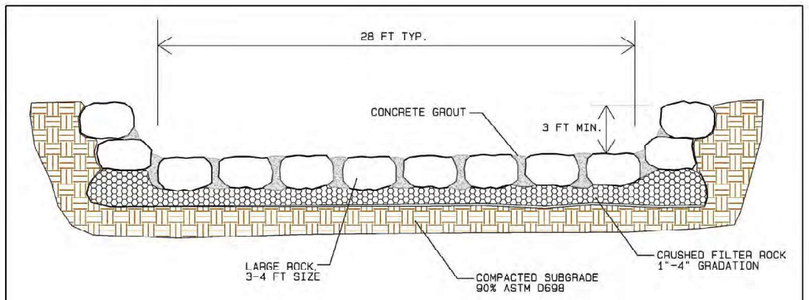

TRANSITION RAMP CROSS SECTION

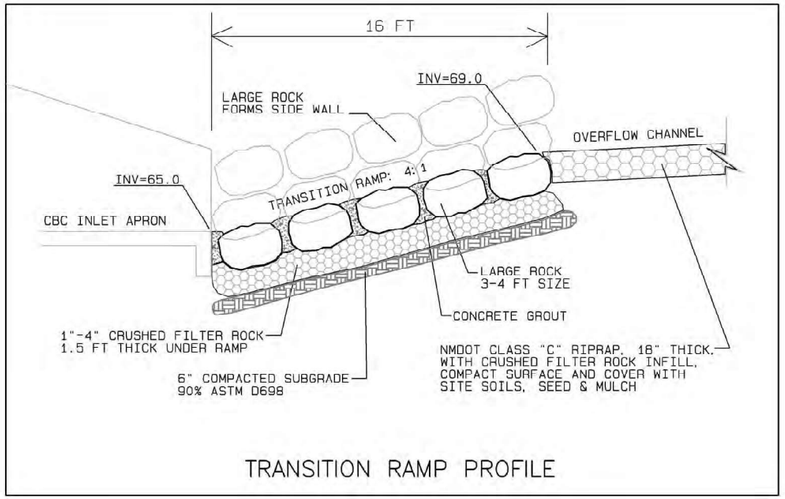

TRANSITION RAMP PROFILE

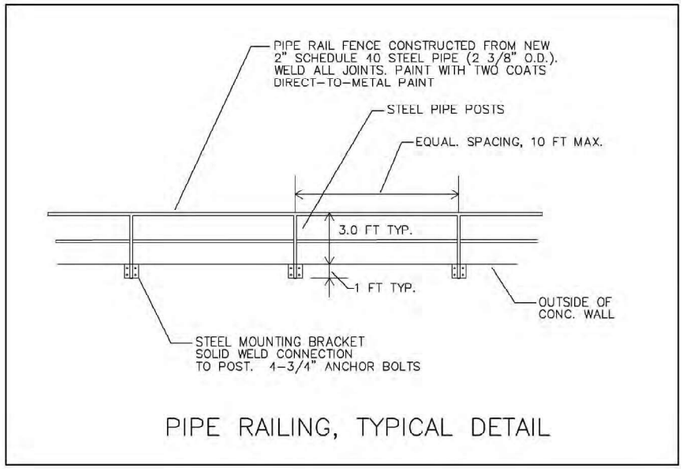

PIPE RAILING, TYPICAL DETAIL

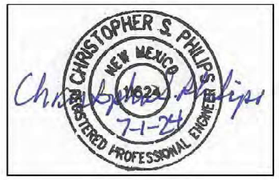

NO.	DATE	APPR.	REVISION	NO.	DATE	APPR.	REVISION
B	11/4/24		100% FINAL				
C	3/27/25		FOR-BID				

VILLAGE OF MADRID, NM
STORM WATER & EROSION CONTROL PROJECT

MADRID NEW MEXICO

RIVERBEND ENGINEERING, LLC

ALBUQUERQUE NEW MEXICO

CHECKED	CP	DATE 10/31/24	CLIENT APPROVALS / DATE
DES. ENG.	CP	10/31/24	
PROJ. ENG.	CP	10/31/24	
PROJ. MGR.	RE	10/31/24	
APPROVED			
APPROVED			

MADRID ARROYO
CAVE ROAD CROSSING DETAILS

DRAWN	DATE	DWG. NO.	REV. NO.
C.PHILIPS	----	C212	C
SCALE	W.O. NO. 15740.001.003	SHT. 62 of 83	

C:\Users\swiers\Weston Solutions, Inc\Engineering Community - AutoCAD\Projects\MADRID STORMWATER\RIVERBEND 100% FINAL.dwg October 30, 2024 - 11:44am

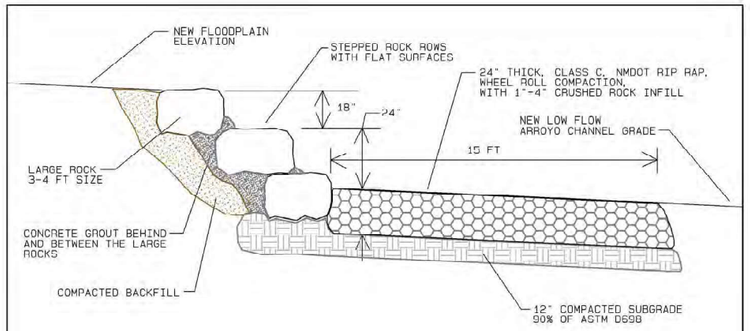

GRADE CONTROL STRUCTURE, SECTION A–A
TYPICAL SECTION AT FLOODPLAIN
N.T.S.

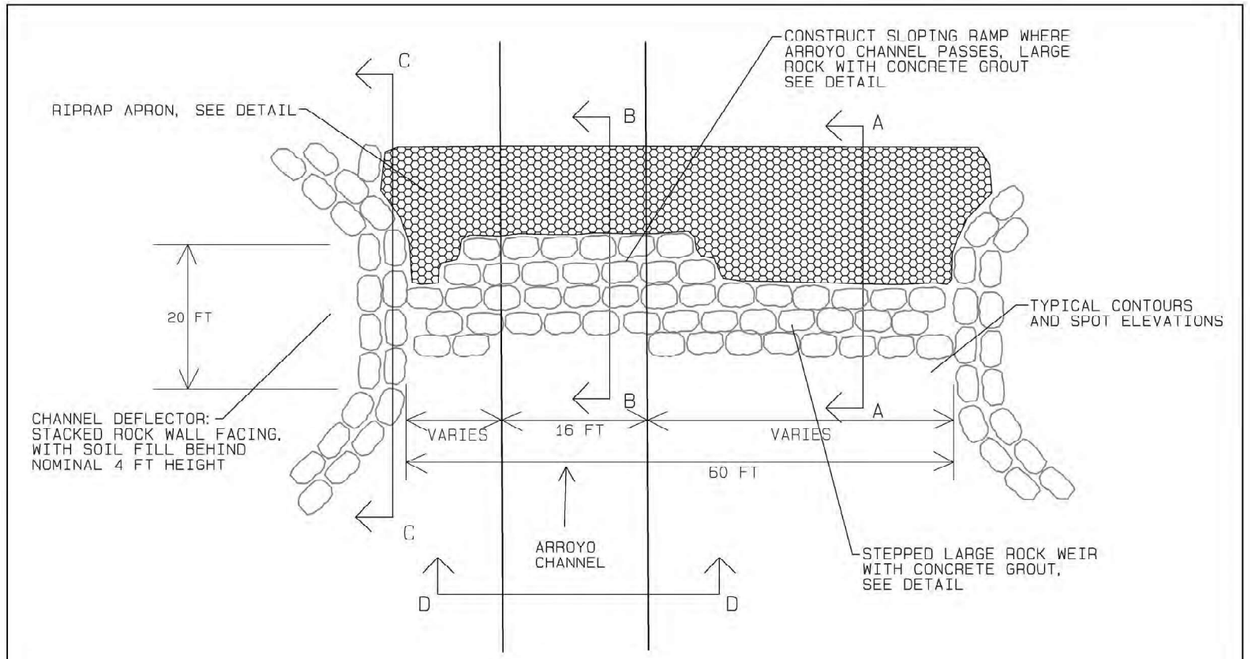

MAIN ARROYO GRADE CONTROL STRUCTURE, PLAN VIEW

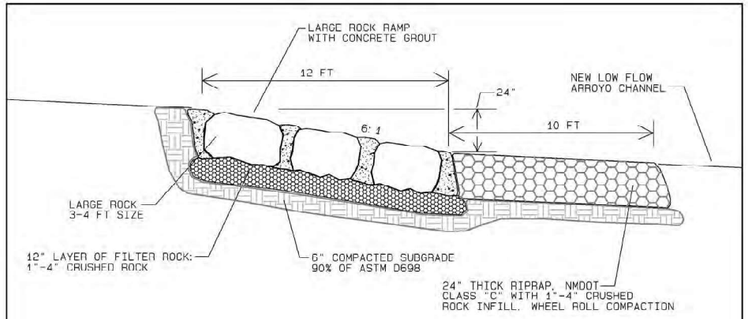

GRADE CONTROL STRUCTURE, SECTION B–B
TYPICAL SECTION AT ARROYO CHANNEL
N.T.S.

NO.	DATE	APPR.	REVISION	NO.	DATE	APPR.	REVISION
B	11/4/24		100% FINAL				
C	3/27/25		FOR-BID				

VILLAGE OF MADRID, NM
STORM WATER & EROSION CONTROL PROJECT

MADRID NEW MEXICO

RIVERBEND ENGINEERING, LLC

ALBUQUERQUE NEW MEXICO

CHECKED	CP	10/31/24	CLIENT APPROVALS / DATE
DES. ENG.	CP	10/31/24	
PROJ. ENG.	CP	10/31/24	
PROJ. MGR.	RE	10/31/24	
APPROVED			
APPROVED			

MADRID ARROYO
GRADE CONTROL STRUCTURE DETAILS

DRAWN	DATE	DWG. NO.	REV. NO.
C.PHILIPS	---	C213	C
SCALE	W.O. NO. 15740.001.003	SHT. 63 of 83	

C:\Users\wolevo\Weston Solutions, Inc\Engineering Community - AutoCAD\Projects\MADRID STORMWATER\RIVERBEND 100% FINAL.dwg October 30, 2024 - 11:44am

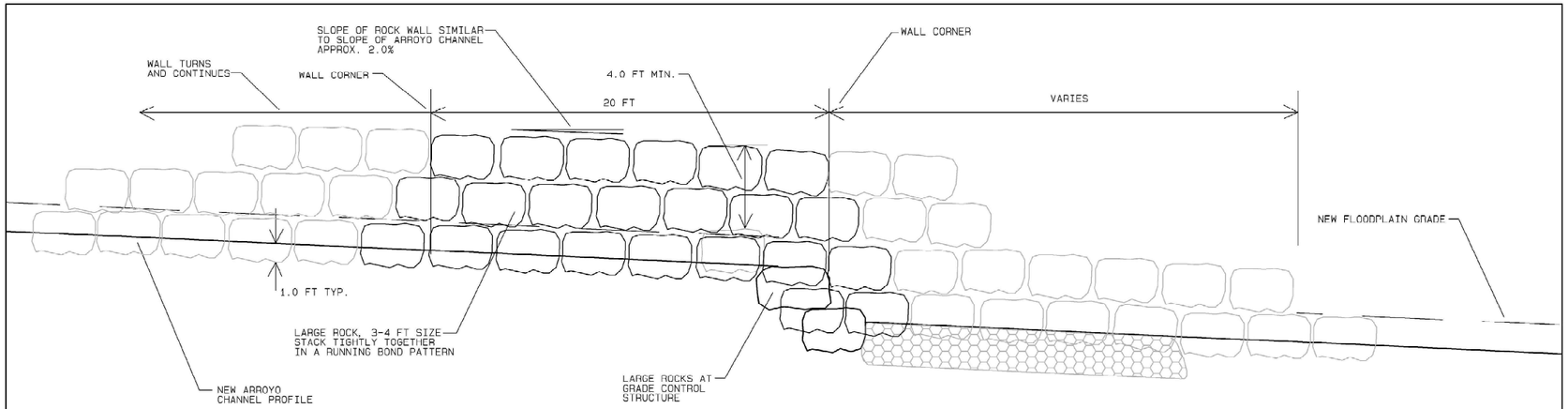

GRADE CONTROL STRUCTURE, SECTION C–C
ROCK WALL PROFILE
N.T.S.

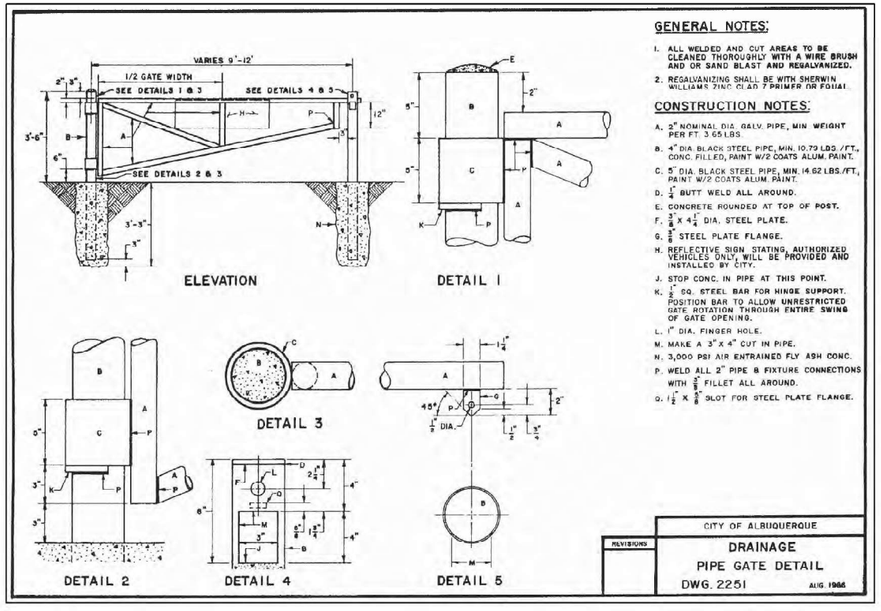

GENERAL NOTES:

1. ALL WELDED AND CUT AREAS TO BE CLEANED THOROUGHLY WITH A WIRE BRUSH AND OR SAND BLAST AND REGALVANIZED.
2. REGALVANIZING SHALL BE WITH SHERWIN WILLIAMS ZINC CLAD 7 PRIMER OR EQUAL.

CONSTRUCTION NOTES:

A. 2" NOMINAL DIA. GALV. PIPE, MIN WEIGHT PER FT. 3.65 LBS.
B. 4" DIA. BLACK STEEL PIPE, MIN. 10.79 LBS./FT., CONC. FILLED, PAINT W/2 COATS ALUM. PAINT.
C. 5" DIA. BLACK STEEL PIPE, MIN. 14.62 LBS./FT., PAINT W/2 COATS ALUM. PAINT.
D. $\frac{1}{4}$" BUTT WELD ALL AROUND.
E. CONCRETE ROUNDED AT TOP OF POST.
F. $\frac{3}{8}$" X $4\frac{1}{4}$" DIA. STEEL PLATE.
G. $\frac{3}{8}$" STEEL PLATE FLANGE.
H. REFLECTIVE SIGN, STATING, AUTHORIZED VEHICLES ONLY, WILL BE PROVIDED AND INSTALLED BY CITY.
J. STOP CONC. IN PIPE AT THIS POINT.
K. $\frac{1}{2}$" SQ. STEEL BAR FOR HINGE SUPPORT. POSITION BAR TO ALLOW UNRESTRICTED GATE ROTATION THROUGH ENTIRE SWING OF GATE OPENING.
L. 1" DIA. FINGER HOLE.
M. MAKE A 3" X 4" CUT IN PIPE.
N. 3,000 PSI AIR ENTRAINED FLY ASH CONC.
P. WELD ALL 2" PIPE & FIXTURE CONNECTIONS WITH $\frac{3}{8}$" FILLET ALL AROUND.
Q. $1\frac{1}{2}$" X $\frac{3}{8}$" SLOT FOR STEEL PLATE FLANGE.

REVISIONS	CITY OF ALBUQUERQUE DRAINAGE PIPE GATE DETAIL DWG. 2251 AUG. 1966

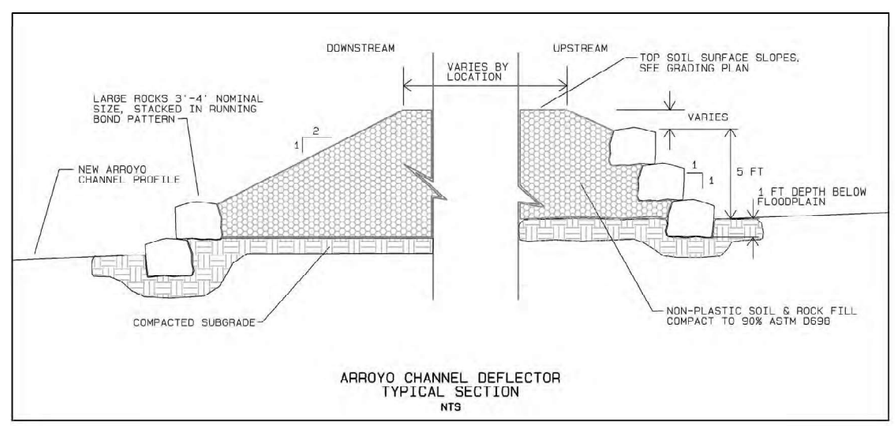

ARROYO CHANNEL DEFLECTOR
TYPICAL SECTION
NTS

CHRISTOPHER S. PHILIPS
NEW MEXICO
17624
REGISTERED PROFESSIONAL ENGINEER
7-1-24

NO.	DATE	APPR.	REVISION	NO.	DATE	APPR.	REVISION
B	11/4/24		100% FINAL				
C	3/27/25		FOR-BID				

VILLAGE OF MADRID, NM
STORM WATER & EROSION CONTROL PROJECT

MADRID NEW MEXICO

ALBUQUERQUE NEW MEXICO

RIVERBEND ENGINEERING, LLC

CHECKED	CP	DATE 10/31/24	CLIENT APPROVALS / DATE
DES. ENG.	CP	10/31/24	
PROJ. ENG.	CP	10/31/24	
PROJ. MGR.	RE	10/31/24	
APPROVED			
APPROVED			

MADRID ARROYO
GRADE CONTROL STRUCTURE DETAILS

DRAWN	DATE	DWG. NO.	REV. NO.
C.PHILIPS	----	C214	C
SCALE	W.O. NO. 15740.001.003	SHT. 64 of 83	

C:\Users\wolevo\Weston Solutions, Inc\Engineering Community - AutoCAD\Projects\MADRID STORMWATER\RIVERBEND 100% FINAL.dwg October 30, 2024 - 11:44am

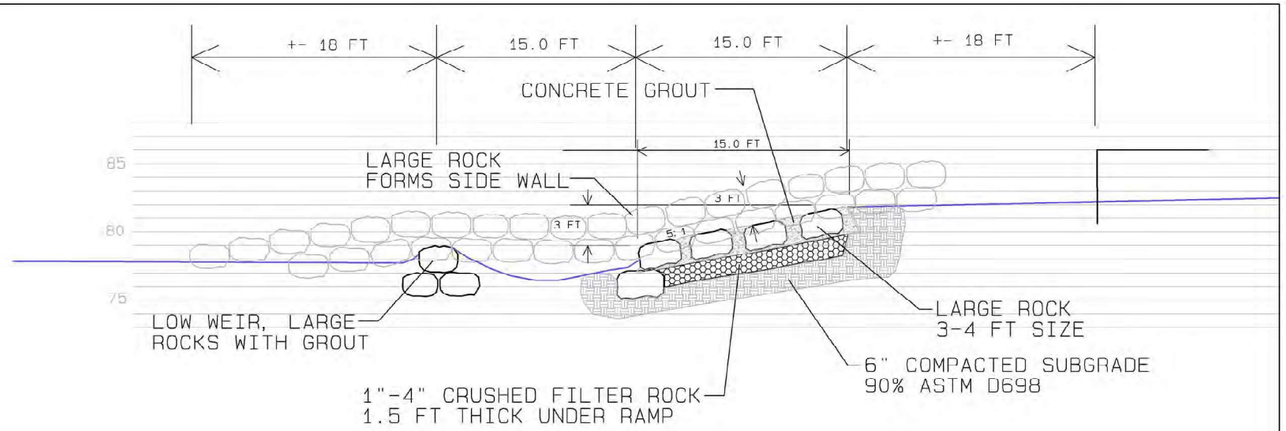

DRAINAGE DITCH RUNDOWN, PROFILE VIEW

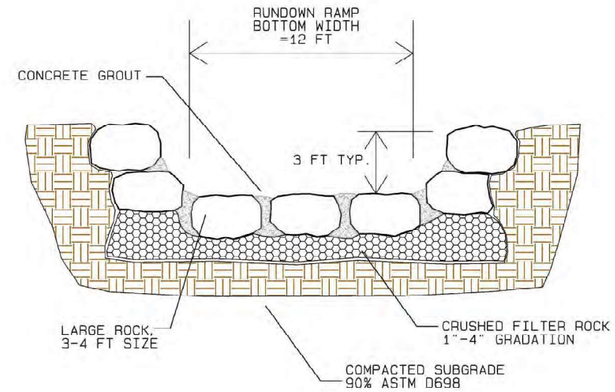

DRAINAGE CHANNEL RUNDOWN
TYPICAL SECTION

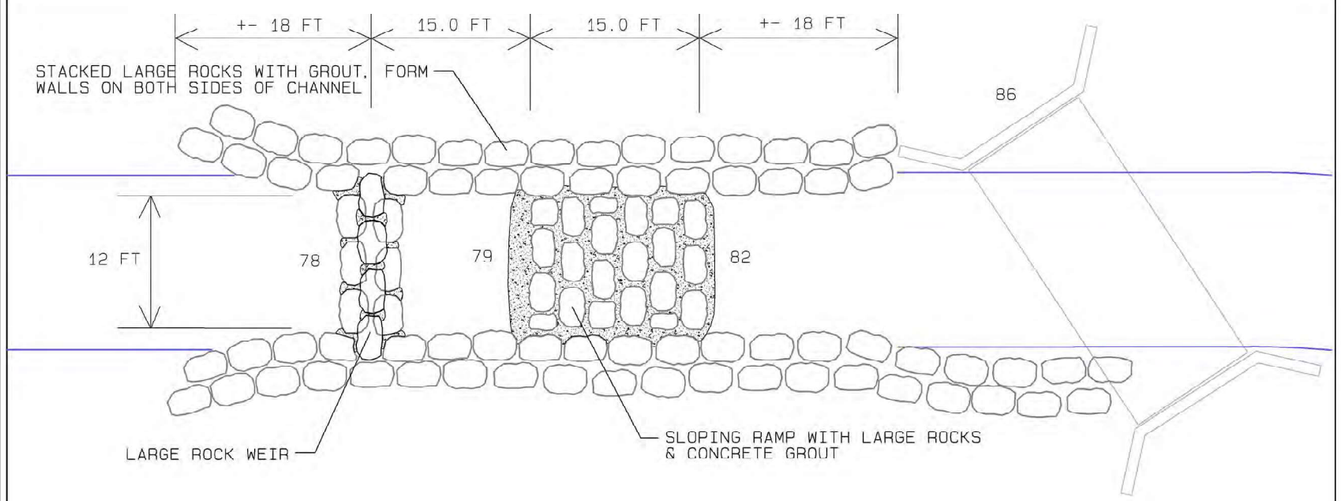

DRAINAGE DITCH RUNDOWN, PLAN VIEW

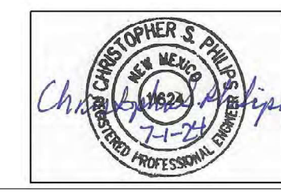

NO.	DATE	APPR.	REVISION	NO.	DATE	APPR.	REVISION
B	11/4/24		100% FINAL				
C	3/27/25		FOR-BID				

VILLAGE OF MADRID, NM
STORM WATER & EROSION CONTROL PROJECT

MADRID NEW MEXICO

RIVERBEND ENGINEERING, LLC

ALBUQUERQUE NEW MEXICO

CHECKED	CP	DATE 10/31/24	CLIENT APPROVALS / DATE
DES. ENG.	CP	10/31/24	
PROJ. ENG.	CP	10/31/24	
PROJ. MGR.	RE	10/31/24	
APPROVED			
APPROVED			

MADRID ARROYO
DRAINAGE DITCH RUNDOWN
PLAN, PROFILE, SECTION

DRAWN	DATE	DWG. NO.	REV. NO.
C.PHILIPS	----	C215	C
SCALE	W.O. NO. 15740.001.003	SHT. 65 of 83	

C:\Users\volero\Weston Solutions, Inc\Engineering Community - AutoCAD\Projects\MADRID STORMWATER\RIVERBEND 100% FINAL.dwg October 30, 2024 - 11:44am

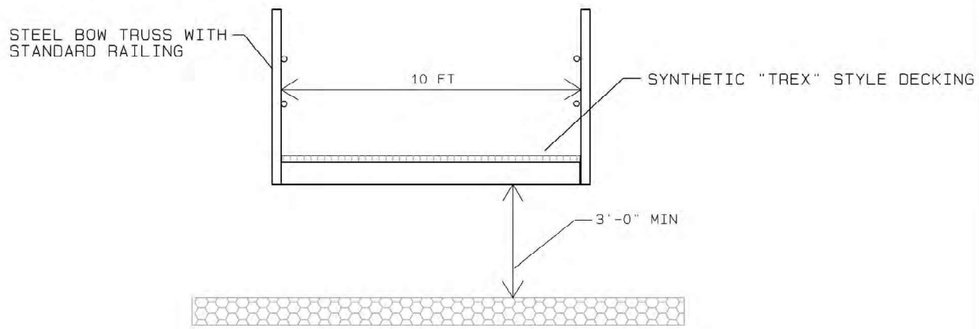

PEDESTRIAN BRIDGE SECTION

NTS

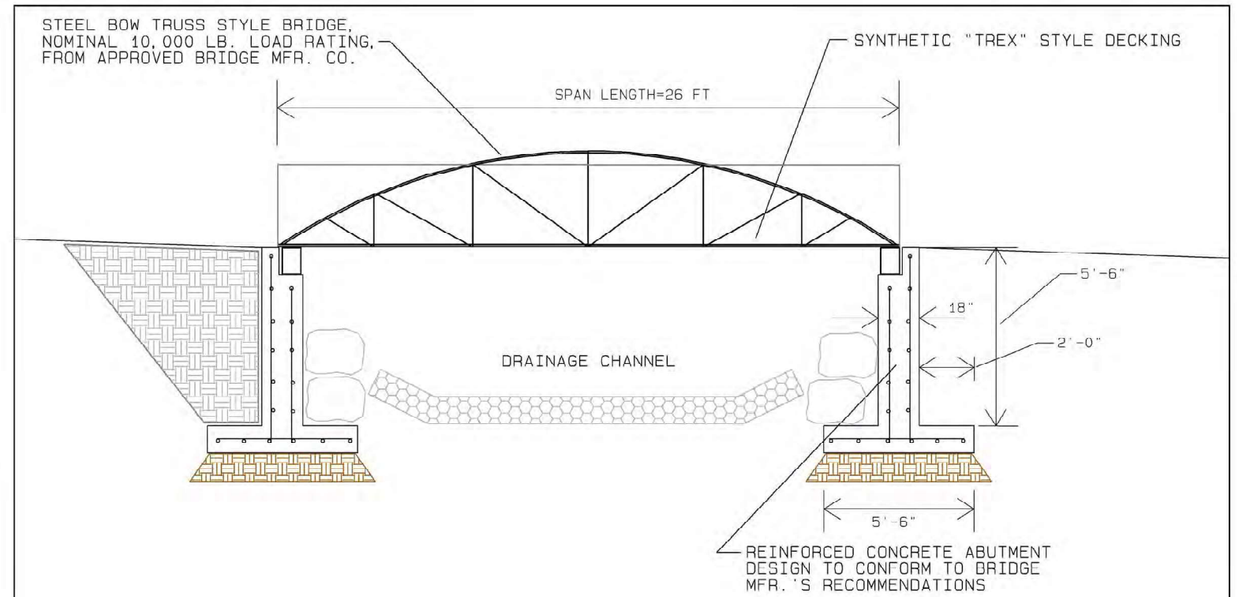

PEDESTRIAN BRIDGE SECTION

NTS

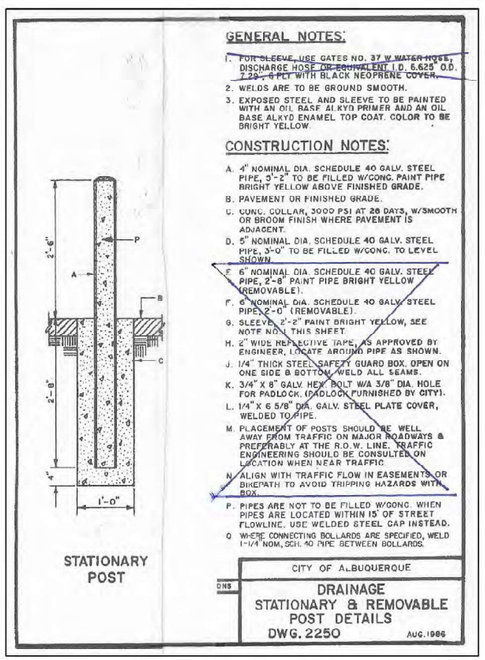

STATIONARY POST

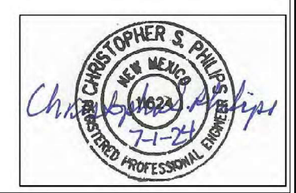

NO.	DATE	APPR.	REVISION	NO.	DATE	APPR.	REVISION
B	11/4/24		100% FINAL				
C	3/27/25		FOR-BID				

VILLAGE OF MADRID, NM
STORM WATER & EROSION CONTROL PROJECT

MADRID NEW MEXICO

RIVERBEND ENGINEERING, LLC

ALBUQUERQUE NEW MEXICO

CHECKED	CP	10/31/24	
DES. ENG.	CP	10/31/24	
PROJ. ENG.	CP	10/31/24	
PROJ. MGR.	RE	10/31/24	
APPROVED			
APPROVED			

CLIENT APPROVALS | DATE

MADRID ARROYO
PEDESTRIAN BRIDGE DETAILS

DRAWN	DATE	DWG. NO.	REV. NO.
C.PHILIPS	----	C216	C
SCALE	W.O. NO. 15740.001.003	SHT. 66 of 83	

C:\Users\waters\Weston Solutions, Inc\Engineering Community - AutoCAD\Projects\MADRID STORMWATER\RIVERBEND 100% FINAL.dwg October 30, 2024 - 11:44am

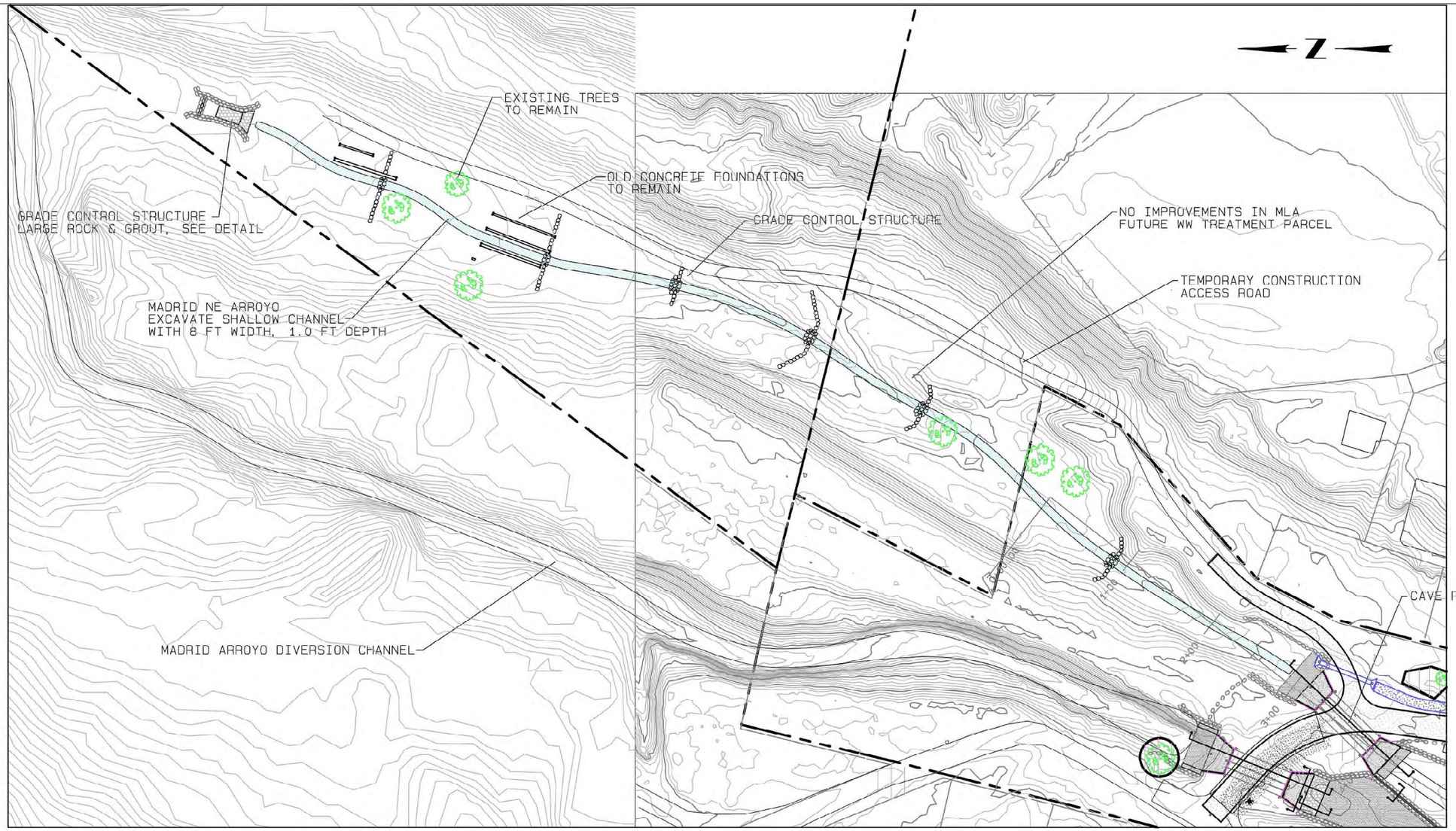

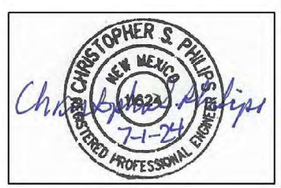

NO.	DATE	APPR.	REVISION	NO.	DATE	APPR.	REVISION
B	11/4/24		100% FINAL				
C	3/27/25		FOR-BID				

VILLAGE OF MADRID, NM
STORM WATER & EROSION CONTROL PROJECT

MADRID NEW MEXICO

RIVERBEND ENGINEERING, LLC

ALBUQUERQUE NEW MEXICO

CHECKED	CP	DATE 10/31/24	CLIENT APPROVALS / DATE
DES. ENG.	CP	10/31/24	
PROJ. ENG.	CP	10/31/24	
PROJ. MGR.	RE	10/31/24	
APPROVED			
APPROVED			

MADRID ARROYO
TYPICAL SECTIONS
ROAD,TRAIL, ARROYO

DRAWN	DATE	DWG. NO.	REV. NO.
C.PHILIPS	----	C217	C
SCALE	W.O. NO. 15740.001.003	SHT. 67 of 83	

C:\Users\walters\Version Solutions, Inc\Engineering Community - AutoCAD\Projects\MADRID STORMWATER\RIVERBEND 100% FINAL.dwg October 30, 2024 - 11:44am

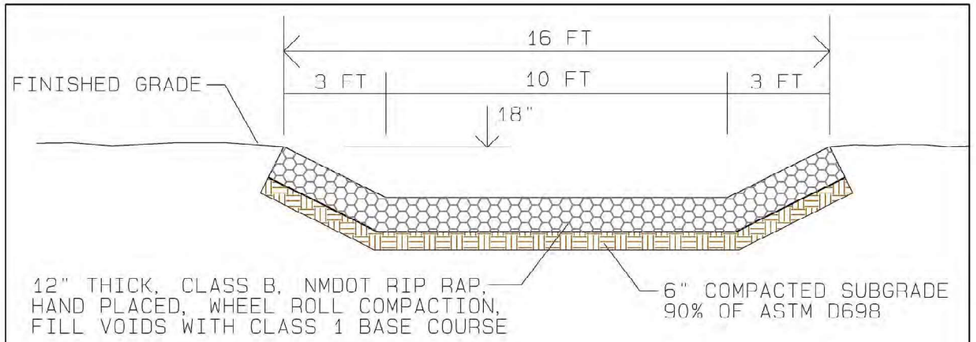

RIP RAP LINED DRAINAGE CHANNEL, LARGE VERSION
TYPICAL SECTION
NTS

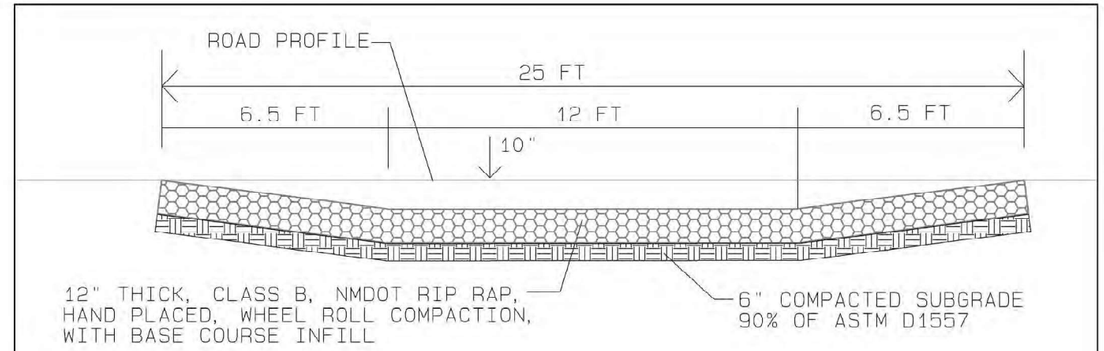

RIP RAP LINED CROSS-ROAD SWALE, LARGE VERSION
TYPICAL SECTION

CROSS SLOPE=1.0-1.5%

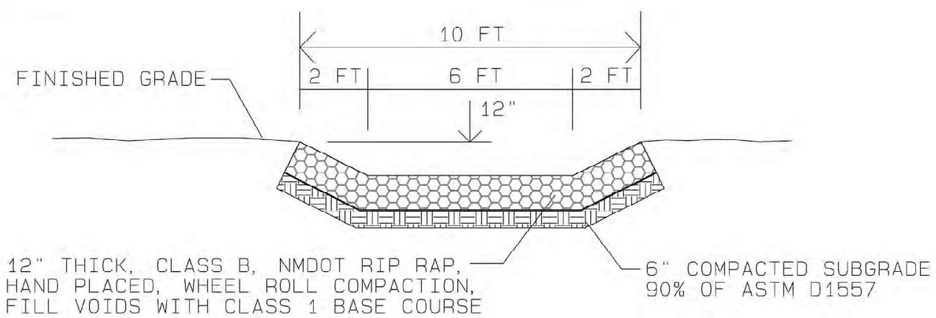

RIP RAP LINED DRAINAGE CHANNEL, SMALL VERSION
TYPICAL SECTION
NTS

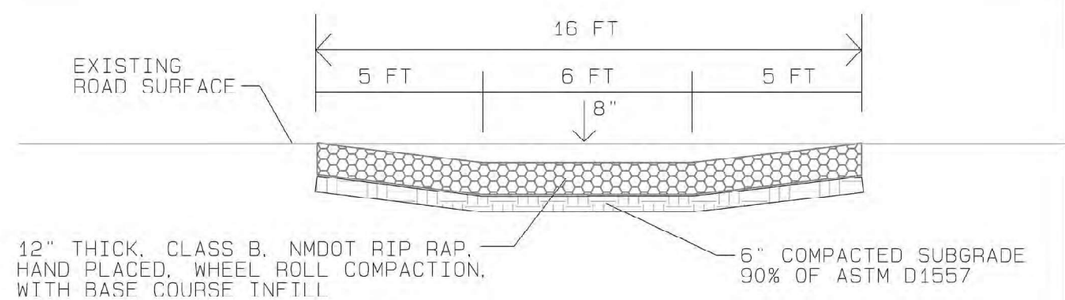

RIP RAP LINED CROSS-ROAD SWALE, SMALL VERSION
TYPICAL SECTION
NTS

CROSS SLOPE-1.0-1.5%

CHRISTOPHER S. PHILIPS
NEW MEXICO
11824
REGISTERED PROFESSIONAL ENGINEER
7-1-24

NO.	DATE	APPR.	REVISION	NO.	DATE	APPR.	REVISION
B	11/4/24		100% FINAL				
C	3/27/25		FOR-BID				

VILLAGE OF MADRID, NM
STORM WATER & EROSION CONTROL PROJECT

MADRID NEW MEXICO

RIVERBEND ENGINEERING, LLC

ALBUQUERQUE NEW MEXICO

CHECKED	CP	DATE 10/31/24	CLIENT APPROVALS	DATE
DES. ENG.	CP	10/31/24		
PROJ. ENG.	CP	10/31/24		
PROJ. MGR.	RE	10/31/24		
APPROVED				
APPROVED				

MADRID ARROYO
TYPICAL SECTIONS
DRAINAGE DITCHES AND CROSS-ROAD SWALES

DRAWN	DATE	DWG. NO.	REV. NO.
C.PHILIPS	---	C218	C
SCALE	W.O. NO. 15740.001.003	SHT. 68 of 83	

C:\Users\walen\Weston Solutions, Inc\Engineering Community - AutoCAD\Projects\MADRID STORMWATER\RIVERBEND 100% FINAL.dwg October 30, 2024 - 11:44am

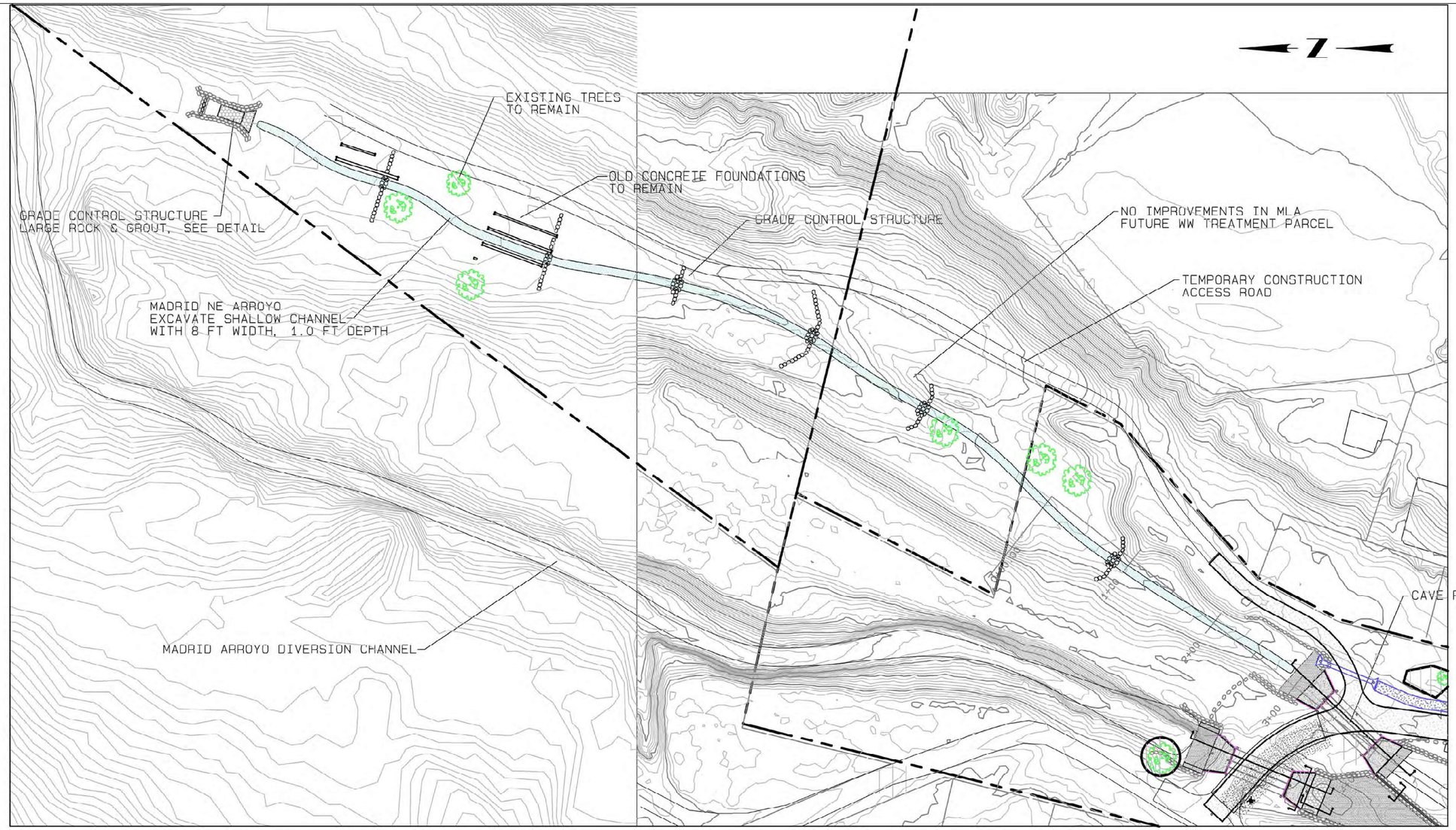

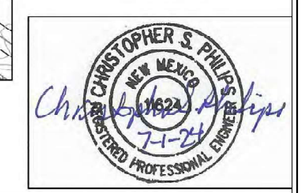

NO.	DATE	APPR.	REVISION	NO.	DATE	APPR.	REVISION
B	11/4/24		100% FINAL				
C	3/27/25		FOR-BID				

VILLAGE OF MADRID, NM
STORM WATER & EROSION CONTROL PROJECT

MADRID NEW MEXICO

RIVERBEND ENGINEERING, LLC

ALBUQUERQUE NEW MEXICO

CHECKED	CP	10/31/24	CLIENT APPROVALS	DATE
DES. ENG.	CP	10/31/24		
PROJ. ENG.	CP	10/31/24		
PROJ. MGR.	RE	10/31/24		
APPROVED				
APPROVED				

MADRID ARROYO
NE ARROYO IMPROVEMENTS
SITE PLAN

DRAWN	DATE	DWG. NO.	REV. NO.
C.PHILIPS	----	C219	C
SCALE	W.O. NO. 15740.001.003	SHT. 69 of 83	

C:\Users\walers\Weston Solutions, Inc\Engineering Community - AutoCAD\Projects\MADRID STORMWATER\RIVERBEND 100% FINAL.dwg October 30, 2024 - 11:44am

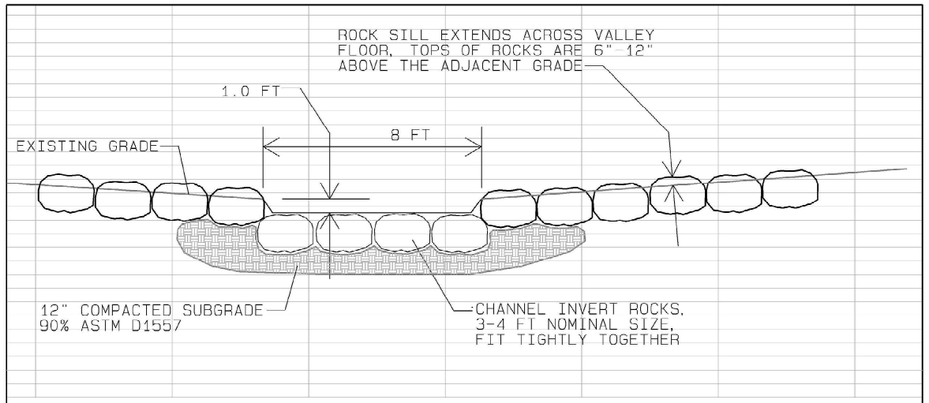

NE ARROYO GRADE CONTROL STRUCTURE, TYPICAL SECTION

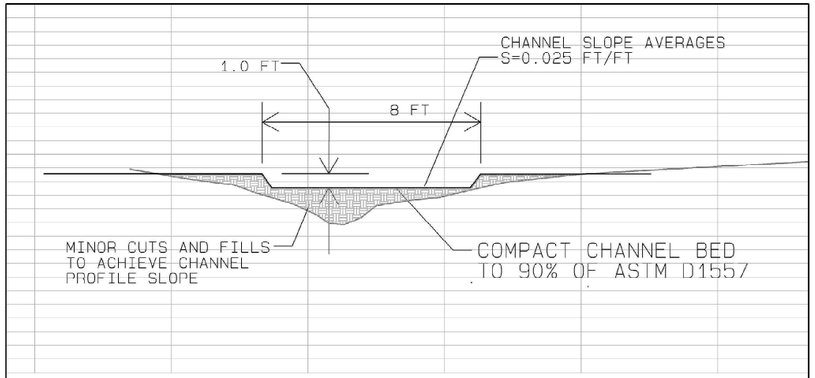

NE ARROYO CHANNEL, TYPICAL SECTION

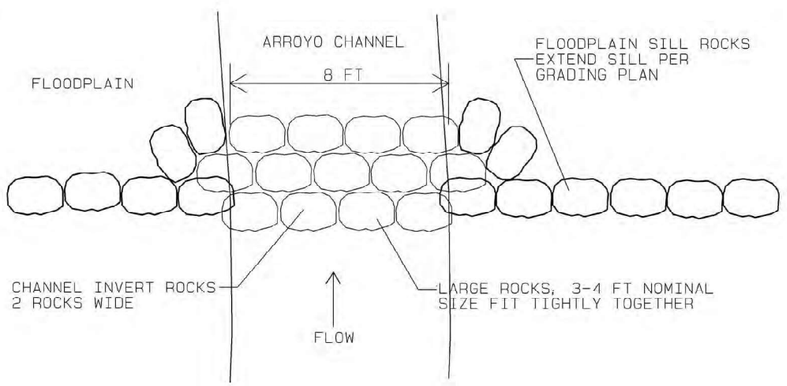

NE ARROYO GRADE CONTROL STRUCTURE, PLAN VIEW

CHRISTOPHER S. PHILIPS NEW MEXICO 21623 REGISTERED PROFESSIONAL ENGINEER 7-1-24

NO.	DATE	APPR.	REVISION	NO.	DATE	APPR.	REVISION
B	11/4/24		100% FINAL				
C	3/27/25		FOR-BID				

VILLAGE OF MADRID, NM
STORM WATER & EROSION CONTROL PROJECT

MADRID NEW MEXICO

RIVERBEND ENGINEERING, LLC

ALBUQUERQUE NEW MEXICO

CHECKED	CP	10/31/24	
DES. ENG.	CP	10/31/24	
PROJ. ENG.	CP	10/31/24	
PROJ. MGR.	RE	10/31/24	
APPROVED			
APPROVED			

CLIENT APPROVALS DATE

MADRID ARROYO
NE ARROYO IMPROVEMENTS
CHANNEL DETAILS

DRAWN	DATE	DWG. NO.	REV. NO.
C.PHILIPS	----	C220	C
SCALE	W.O. NO. 15740.001.003	SHT. 70 of 83	

C:\Users\waters\Weston Solutions, Inc\Engineering Community - AutoCAD\Projects\MADRID STORMWATER\RIVERBEND 100% FINAL.dwg October 30, 2024 - 11:44am

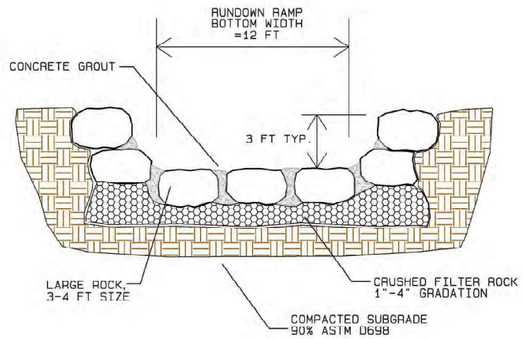

ARROYO GRADE CONTROL STRUCTURE
TYPICAL SECTION

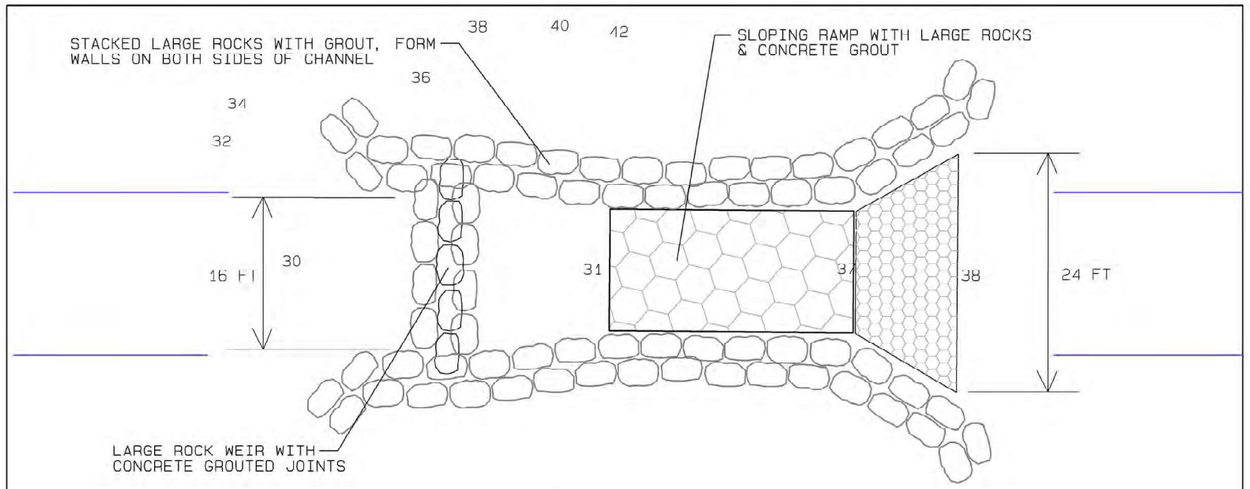

ARROYO GRADE CONTROL STRUCTURE, PLAN VIEW

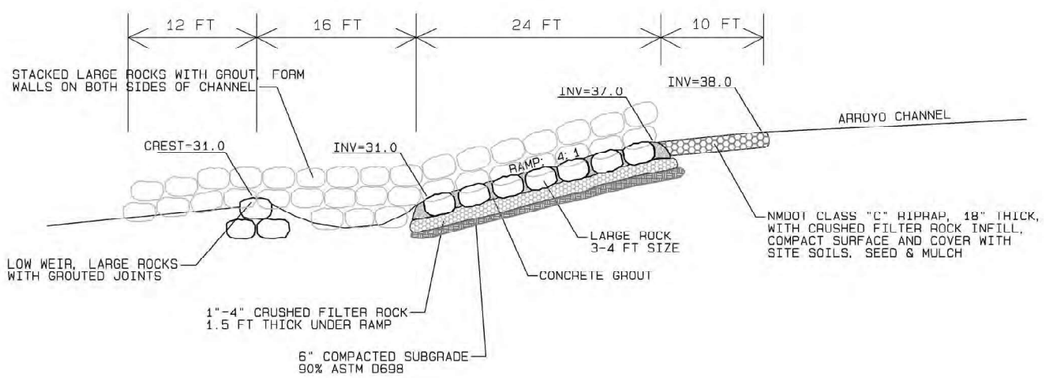

ARROYO GRADE CONTROL STRUCTURE, PROFILE

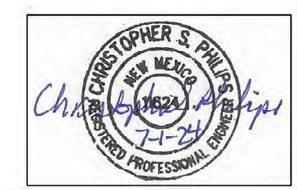

NO.	DATE	APPR.	REVISION	NO.	DATE	APPR.	REVISION
B	11/4/24		100% FINAL				
C	3/27/25		FOR-BID				

VILLAGE OF MADRID, NM
STORM WATER & EROSION CONTROL PROJECT

MADRID NEW MEXICO

RIVERBEND ENGINEERING, LLC

ALBUQUERQUE NEW MEXICO

CHECKED	CP	10/31/24	
DES. ENG.	CP	10/31/24	
PROJ. ENG.	CP	10/31/24	
PROJ. MGR.	RE	10/31/24	
APPROVED			
APPROVED			

CLIENT APPROVALS DATE

MADRID ARROYO
NE ARROYO IMPROVEMENTS
GRADE CONTROL STRUCTURE

DRAWN	DATE	DWG. NO.	REV. NO.
C.PHILIPS	----	C221	C
SCALE	W.O. NO. 15740.001.003	SHT. 71 of 83	

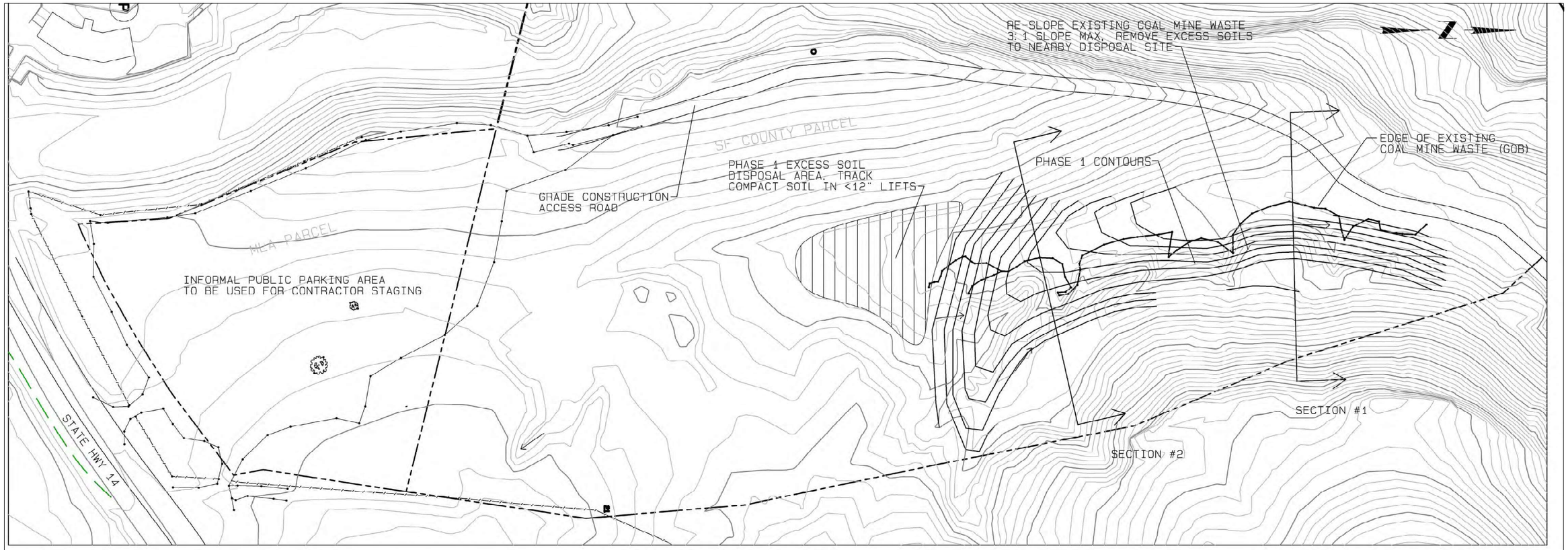

PHASE 1 SITE PLAN

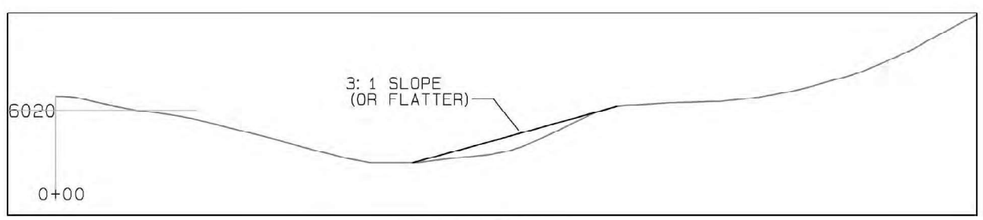

SECTION 1

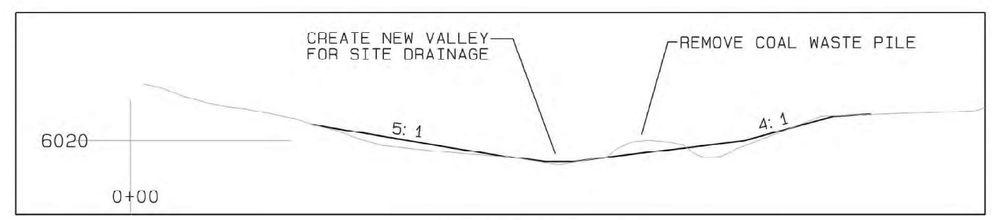

SECTION 2

CHRISTOPHER S. PHILIPS
NEW MEXICO
21624
REGISTERED PROFESSIONAL ENGINEER
7-1-24

NO.	DATE	APPR.	REVISION	NO.	DATE	APPR.	REVISION
B	11/4/24		100% FINAL				
C	3/27/25		FOR-BID				

VILLAGE OF MADRID, NM
STORM WATER & EROSION CONTROL PROJECT

MADRID NEW MEXICO

RIVERBEND ENGINEERING, LLC

ALBUQUERQUE NEW MEXICO

CHECKED	CP	DATE 10/31/24	CLIENT APPROVALS	DATE
DES. ENG.	CP	10/31/24		
PROJ. ENG.	CP	10/31/24		
PROJ. MGR.	RE	10/31/24		
APPROVED				
APPROVED				

MADRID ARROYO
PHASE 1 SITE PLAN, SOIL GRADING, AND
CONTRACTOR STAGING AREA

DRAWN	DATE	DWG. NO.	REV. NO.
C.PHILIPS	----	C222	C
SCALE	W.O. NO. 15740.001.003	SHT. 72 of 83	

C:\Users\waters\Weston Solutions, Inc\Engineering Community - AutoCAD\Projects\MADRID STORMWATER\RIVERBEND 100% FINAL.dwg October 30, 2024 - 11:44am

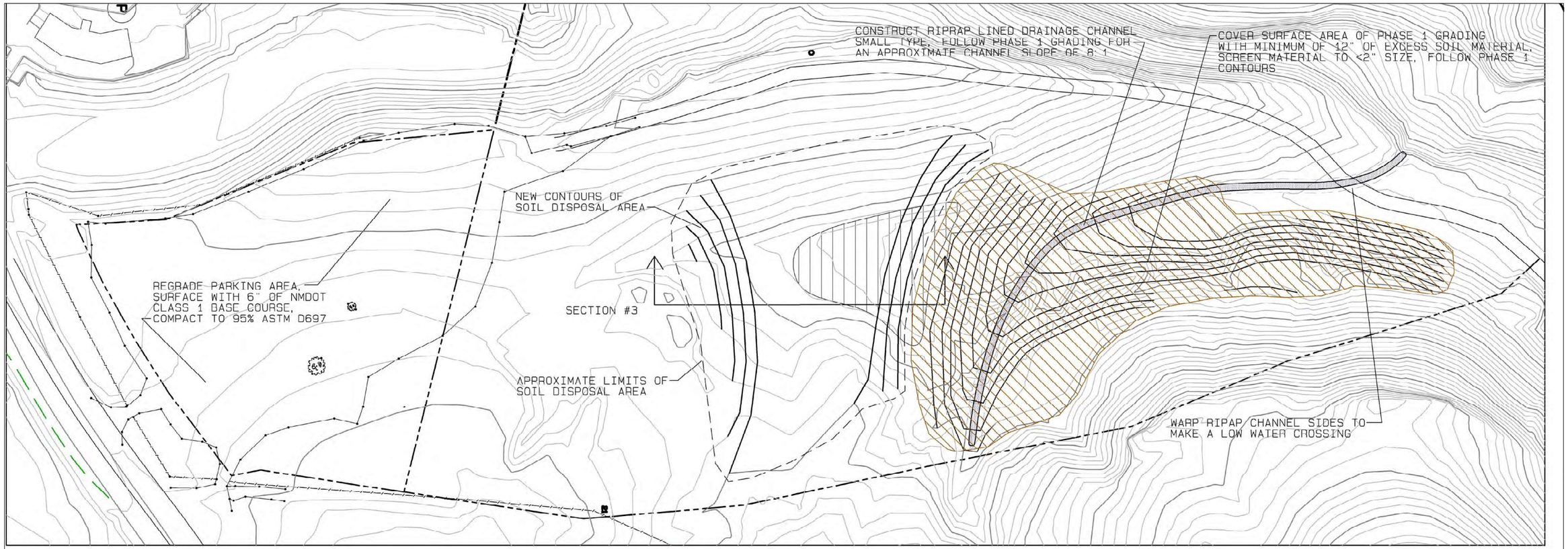

NOTE: THE FINAL ELEVATION OF THE PHASE 2 SOIL FILL WILL HAVE TO BE ADJUSTED TO MEET FIELD CONDITIONS. THE QUANTITY OF SOIL ACTUALY REMOVED FROM MADRID ARROYO AND OTHER PROJECT AREAS, THE QUANTITY OF FILL NEEDED TO COVER THE PHASE 1 GRADING, SOIL SHRINK, ETC. WILL AFFECT THE FINAL EXCESS SOIL GRADES, UP OR DOWN.

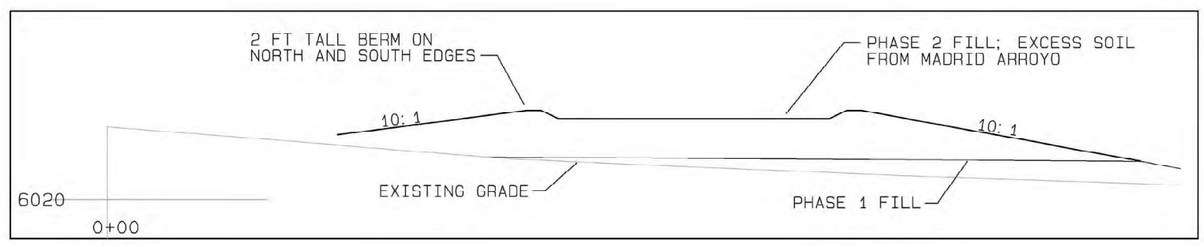

SECTION 3

CHRISTOPHER S. PHILIPS
NEW MEXICO
16221
REGISTERED PROFESSIONAL ENGINEER
7-1-24

NO.	DATE	APPR.	REVISION	NO.	DATE	APPR.	REVISION
B	11/4/24		100% FINAL				
C	3/27/25		FOR-BID				

VILLAGE OF MADRID, NM
STORM WATER & EROSION CONTROL PROJECT

MADRID NEW MEXICO

RIVERBEND ENGINEERING, LLC

ALBUQUERQUE NEW MEXICO

CHECKED	CP	DATE 10/31/24	CLIENT APPROVALS	DATE
DES. ENG.	CP	10/31/24		
PROJ. ENG.	CP	10/31/24		
PROJ. MGR.	RE	10/31/24		
APPROVED				
APPROVED				

MADRID ARROYO
PHASE 2 SITE PLAN, SOIL GRADING, AND CONTRACTOR STAGING AREA

DRAWN	DATE	DWG. NO.	REV. NO.
C.PHILIPS	----	C223	C
SCALE	W.O. NO. 15740.001.003	SHT. 73 of 83	

C:\Users\water\Vertex Solutions, Inc\Engineering Community - AutoCAD\Projects\MADRID STORMWATER\RIVERBEND 100% FINAL.dwg, October 30, 2024 - 11:44am

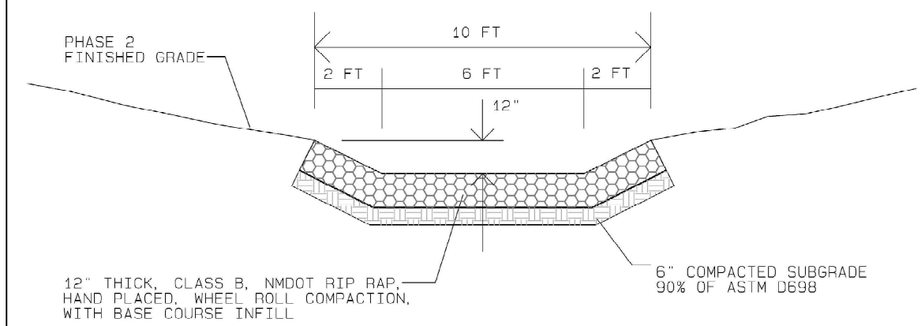

RIP RAP LINED DRAINAGE CHANNEL, SMALL VERSION
TYPICAL SECTION
NTS

CHRISTOPHER S. PHILIPS
NEW MEXICO
17624
REGISTERED PROFESSIONAL ENGINEER
7-1-24

NO.	DATE	APPR.	REVISION	NO.	DATE	APPR.	REVISION
B	11/4/24		100% FINAL				
C	3/27/25		FOR-BID				

VILLAGE OF MADRID, NM
STORM WATER & EROSION CONTROL PROJECT
MADRID NEW MEXICO

RIVERBEND ENGINEERING, LLC
ALBUQUERQUE NEW MEXICO

		DATE	CLIENT APPROVALS	DATE
CHECKED	CP	10/31/24		
DES. ENG.	CP	10/31/24		
PROJ. ENG.	CP	10/31/24		
PROJ. MGR.	RE	10/31/24		
APPROVED				
APPROVED				

MADRID ARROYO
SOIL DISPOSAL AREA
CONSTRUCTION DETAILS

DRAWN	DATE	DWG. NO.	REV. NO.
C.PHILIPS	----	C224	C
SCALE	W.O. NO. 15740.001.003	SHT. 74 of 83	

C:\Users\valero\Weston Solutions, Inc\Engineering Community - AutoCAD\Projects\MADRID STORMWATER\RIVERBEND 100% FINAL.dwg October 30, 2024 - 11:44am

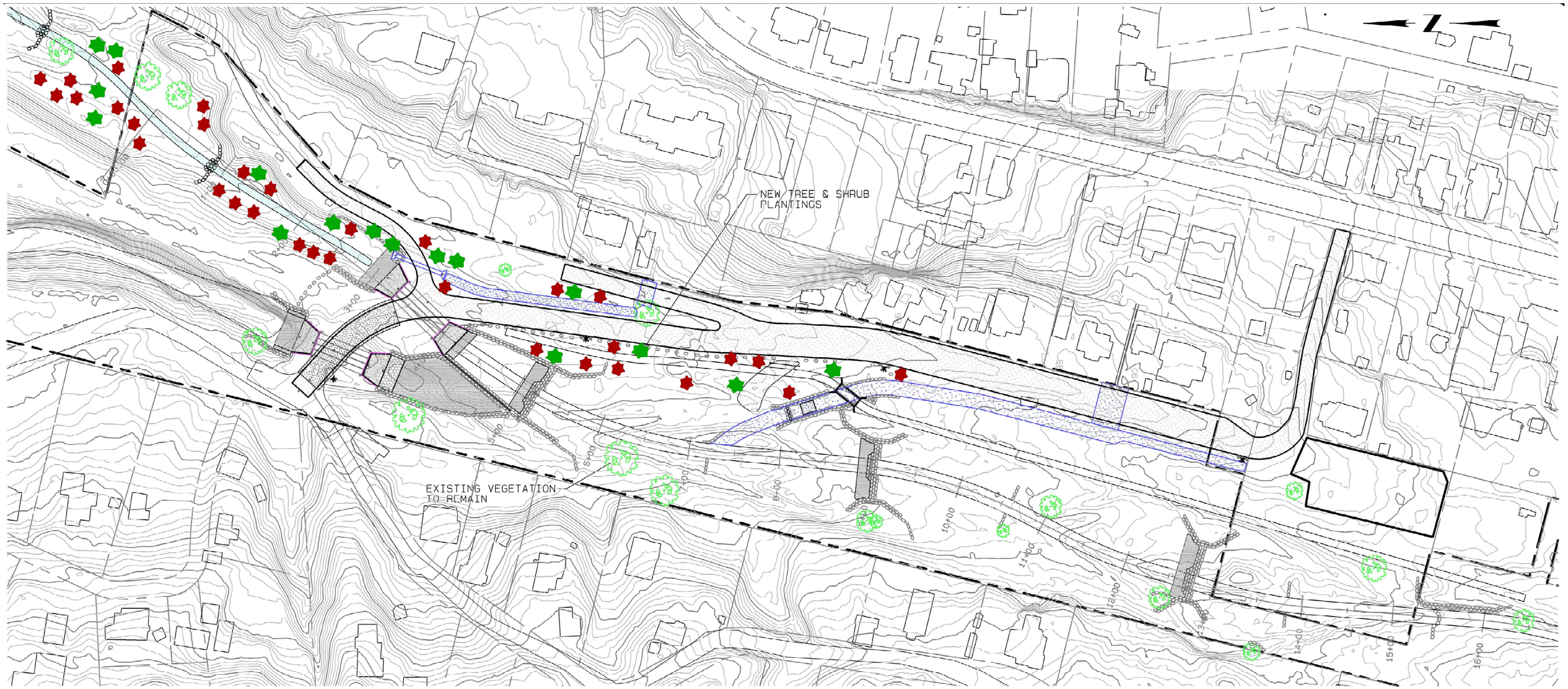

PLANTING LEGEND

- SUMAC OR OAK TREE
- PINON TREE

0 50' 100' 200'

DBS&A
a Geo-Logic Company

NO.	DATE	APPR.	REVISION	NO.	DATE	APPR.	REVISION
B	11/4/24		100% FINAL				
C	3/27/25		FOR-BID				

VILLAGE OF MADRID, NM
STORM WATER & EROSION CONTROL PROJECT

MADRID NEW MEXICO

RIVERBEND ENGINEERING, LLC

ALBUQUERQUE NEW MEXICO

CHECKED	CP	10/31/24	CLIENT APPROVALS	DATE
DES. ENG.	CP	10/31/24		
PROJ. ENG.	CP	10/31/24		
PROJ. MGR.	RE	10/31/24		
APPROVED				
APPROVED				

MADRID ARROYO
PLANTING PLAN

DRAWN	DATE	DWG. NO.	REV. NO.
C.PHILIPS	----	C225	C
SCALE	W.O. NO. 15740.001.003	SHT. 75 of 83	

C:\Users\walers\Weston Solutions, Inc\Engineering Community - AutoCAD\Projects\MADRID STORM\WATER\RIVERBEND 100% FINAL.dwg October 30, 2024 - 11:44am

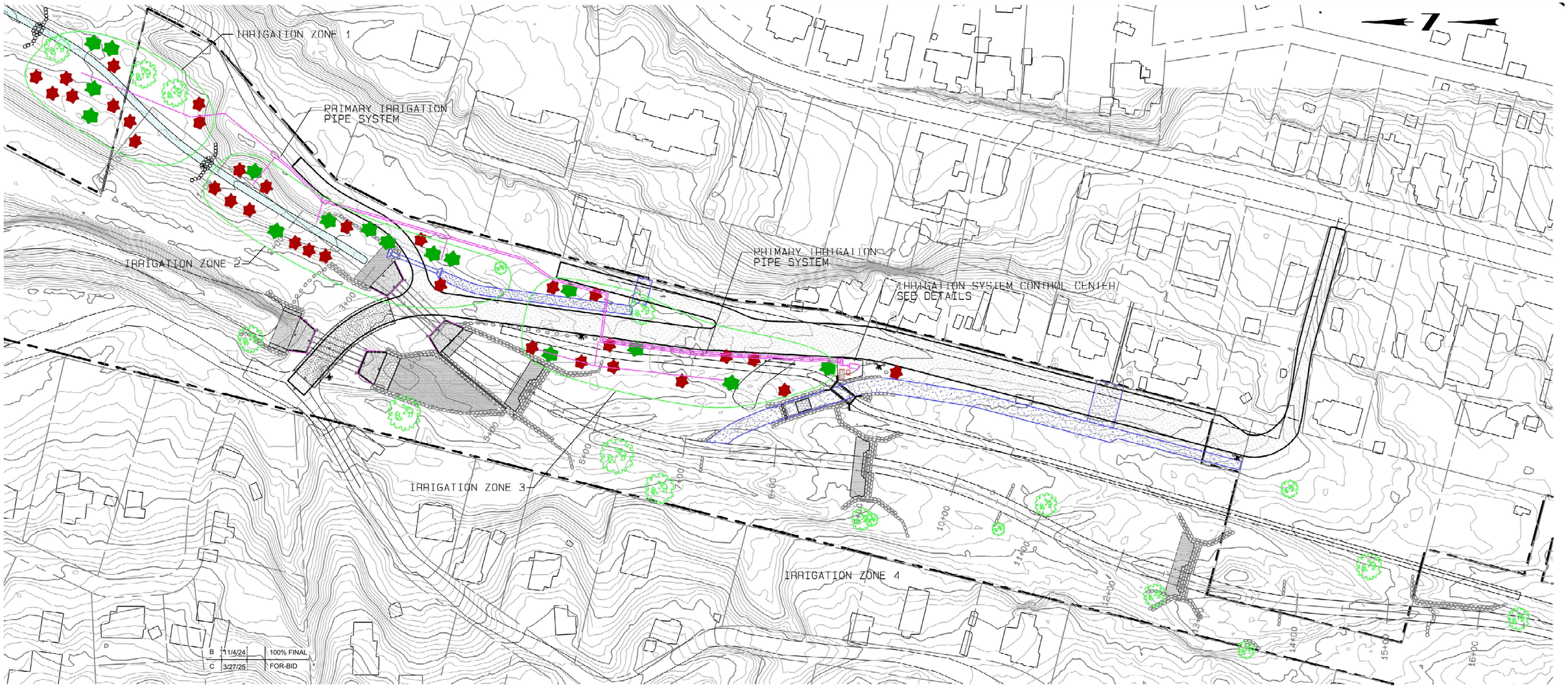

0 50' 100' 200'

CHRISTOPHER S. PHILIPS NEW MEXICO REGISTERED PROFESSIONAL ENGINEER 3-19-25

NO.	DATE	APPR.	REVISION	NO.	DATE	APPR.	REVISION
B	11/4/24		100% FINAL				
C	3/27/25		FOR-BID				

VILLAGE OF MADRID, NM
STORM WATER & EROSION CONTROL PROJECT

MADRID NEW MEXICO

RIVERBEND ENGINEERING, LLC

ALBUQUERQUE NEW MEXICO

CHECKED	CP	10/31/24	CLIENT APPROVALS	DATE
DES. ENG.	CP	10/31/24		
PROJ. ENG.	CP	10/31/24		
PROJ. MGR.	RE	10/31/24		
APPROVED				
APPROVED				

MADRID ARROYO
IRRIGATION PLAN

DRAWN	DATE	DWG. NO.	REV. NO.
C.PHILIPS	----	C226	C
SCALE	W.O. NO. 15740.001.003	SHT. 76 of 83	

C:\Users\rodeno\Weston Solutions, Inc\Engineering Community - AutoCAD\Projects\MADRID STORMWATER\RIVERBEND 100% FINAL.dwg October 30, 2024 - 11:44am

NOTES:

1) SEED QUANTITIES IN THE BID FORM HAVE BEEN INCREASED UNIFORMLY BY 10% OVER NEAT LINE QUANTITIES. THIS IS INTENDED TO ACCOUNT FOR THE APPLICATION OF SEED & MULCH IN MANY SMALL ZONES THAT ARE NOT EXPRESSLY SHOWN ON THE PLANS.
2) A MORE DETAILED VERSION OF THE SEEDING PLAN MAY BE OBTAINED FROM THE ENGINEER UPON REQUEST.

SEEDING TYPE KEY

- Type A seeding, upland mix
- Type B seeding, higher soil moisture
- Type C seeding, shade adapted mix
- Type D seeding, mix of types A & B
- Type E seeding, mix of types B & C
- Type F seeding, type A mix, no mulch
- Straw Wattle locations

Note: Areas of Types A, B, C, D & E wll all require hydromulch application

0 100' 200' 400'

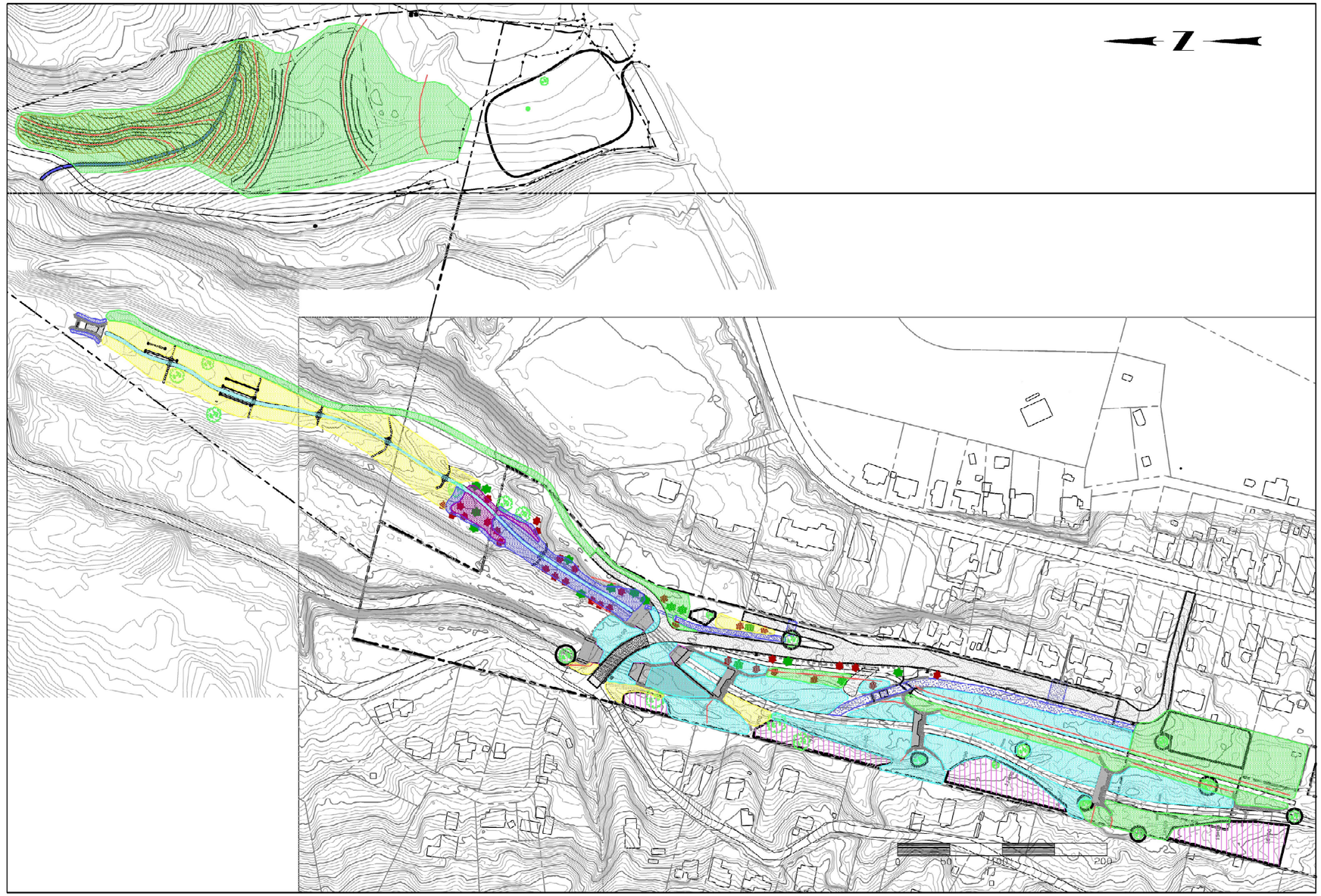

DBS&A
a Geo-Logic Company

C:\Users\rodarte\Weston Solutions, Inc\Engineering Community - AutoCAD\Projects\MADRID STORMWATER\RIVERBEND 100% FINAL.dwg October 30, 2024 - 11:44am

NO.	DATE	APPR.	REVISION	NO.	DATE	APPR.	REVISION
B	11/4/24		100% FINAL				
C	3/27/25		FOR-BID				

VILLAGE OF MADRID, NM
STORM WATER & EROSION CONTROL PROJECT

MADRID NEW MEXICO

RIVERBEND ENGINEERING, LLC

ALBUQUERQUE NEW MEXICO

		DATE	CLIENT APPROVALS	DATE
CHECKED	CP	10/31/24		
DES. ENG.	CP	10/31/24		
PROJ. ENG.	CP	10/31/24		
PROJ. MGR.	RE	10/31/24		
APPROVED				
APPROVED				

MADRID ARROYO
SEEDING PLAN
SEED TYPE OVERVIEW

DRAWN	DATE	DWG. NO.	REV. NO.
C.PHILIPS	----	C227	C
SCALE	W.O. NO. 15740.001.003	SHT. 77 of 83	

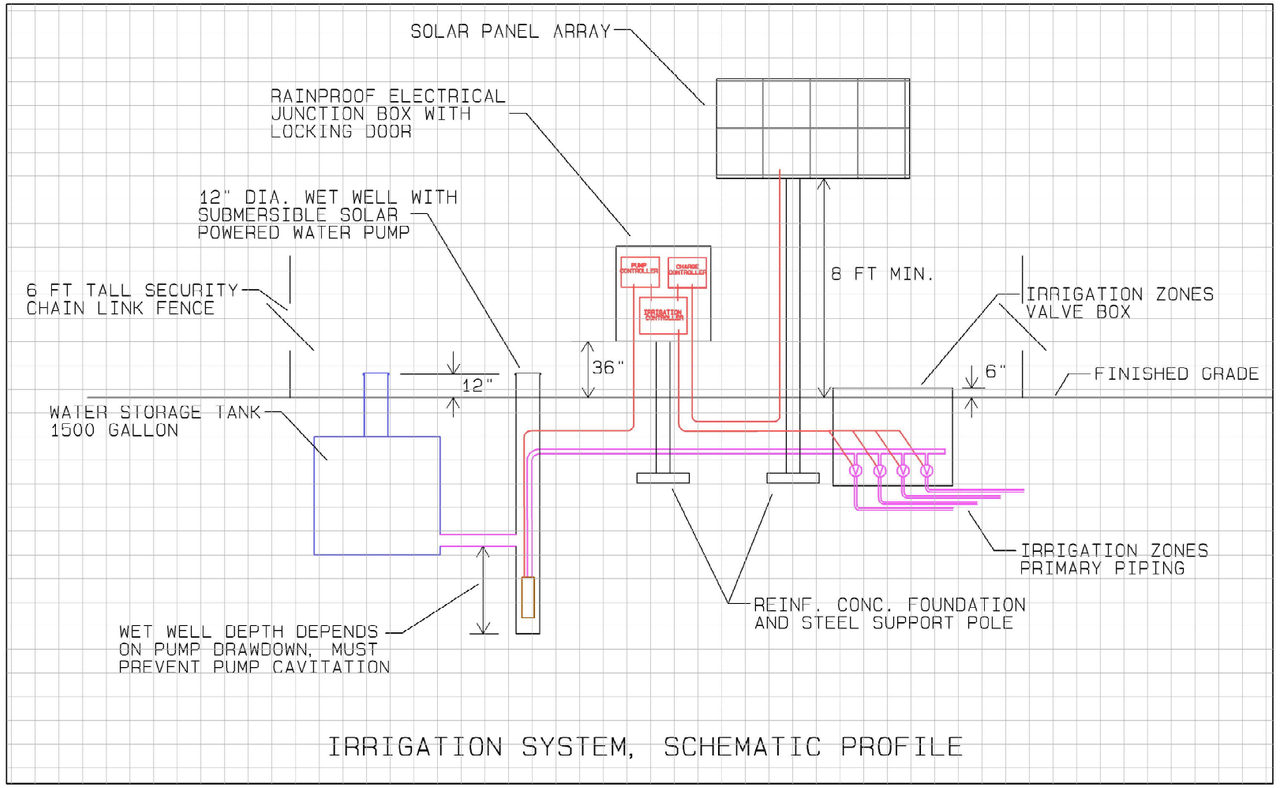

IRRIGATION SYSTEM, SCHEMATIC PROFILE

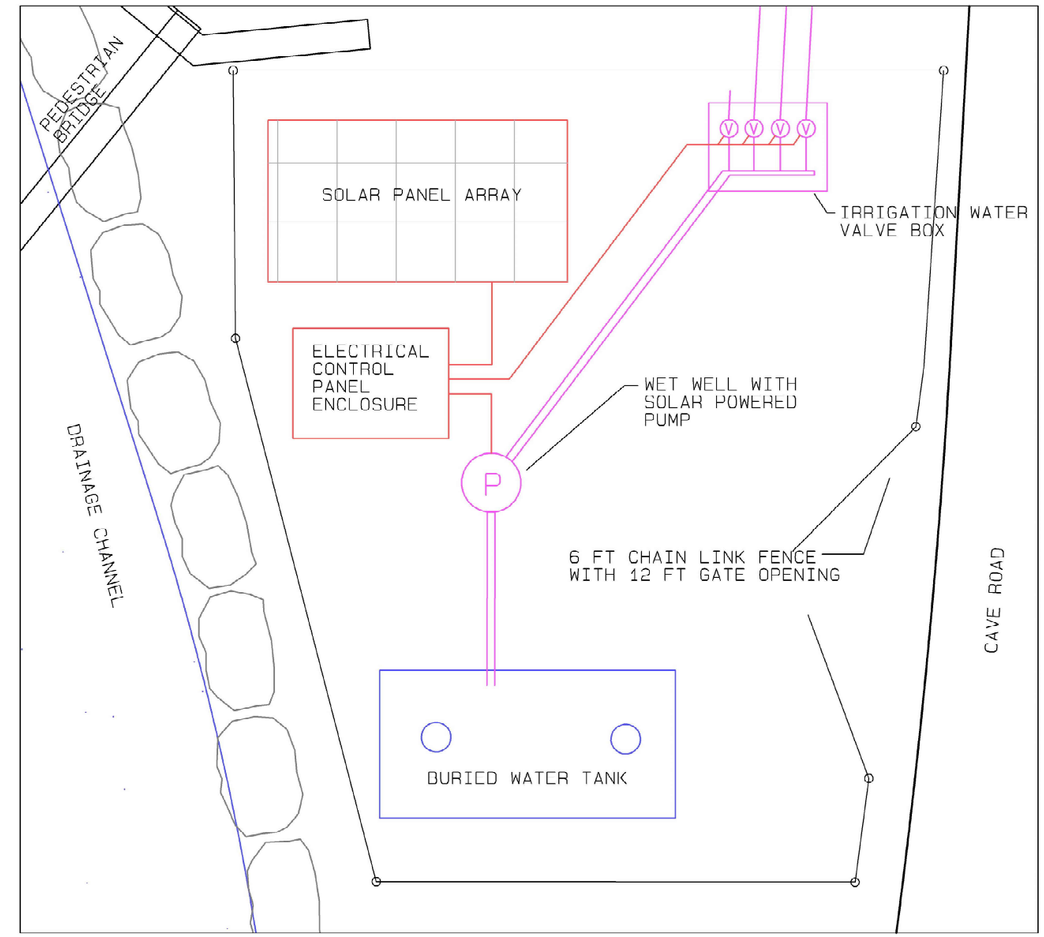

IRRIGATION CONTROL SYSTEM, PLAN VIEW

CHRISTOPHER S. PHILIPS NEW MEXICO REGISTERED PROFESSIONAL ENGINEER 3-19-25

NO.	DATE	APPR.	REVISION	NO.	DATE	APPR.	REVISION
B	11/4/24		100% FINAL				
C	3/27/25		FOR-BID				

VILLAGE OF MADRID, NM
STORM WATER & EROSION CONTROL PROJECT

MADRID NEW MEXICO

RIVERBEND ENGINEERING, LLC

ALBUQUERQUE NEW MEXICO

		DATE	CLIENT APPROVALS	DATE
CHECKED	CP	10/31/24		
DES. ENG.	CP	10/31/24		
PROJ. ENG.	CP	10/31/24		
PROJ. MGR.	RE	10/31/24		
APPROVED				
APPROVED				

MADRID ARROYO
IRRIGATION PLAN
CONTROL SYSTEM

DRAWN	DATE	DWG. NO.	REV. NO.
C.PHILIPS	---	C228	C
SCALE	W.O. NO. 15740.001.003	SHT. 78 of 83	

C:\Users\wetevo\Weston Solutions, Inc\Engineering Community - AutoCAD\Projects\MADRID STORMWATER\RIVERBEND 100% FINAL.dwg October 30, 2024 - 11:44am

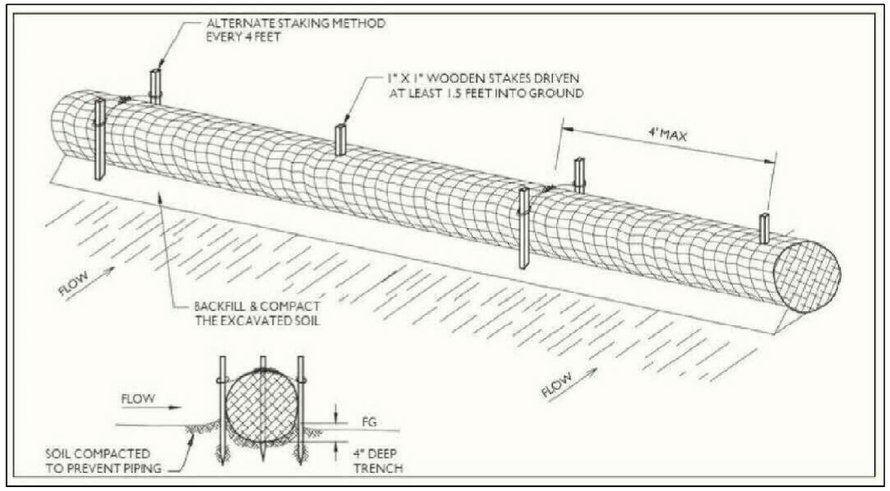

STRAW WATTLE INSTALLATION DETAIL

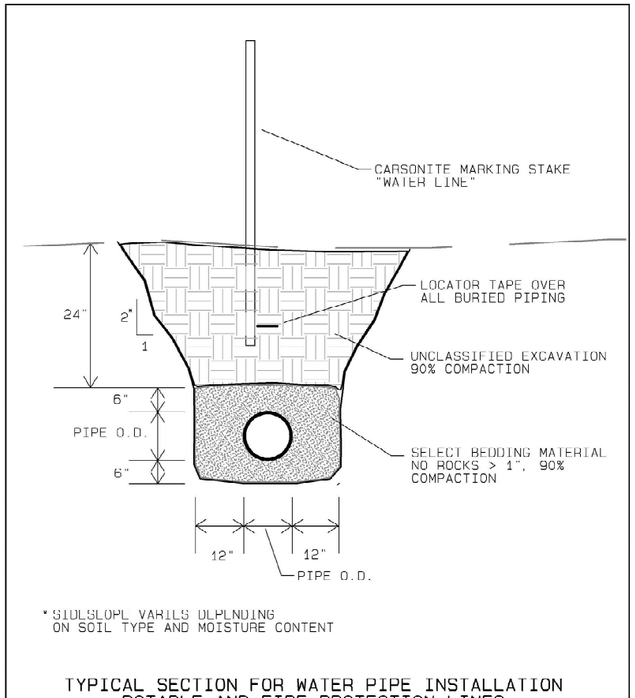

TYPICAL SECTION FOR WATER PIPE INSTALLATION
POTABLE AND FIRE PROTECTION LINES

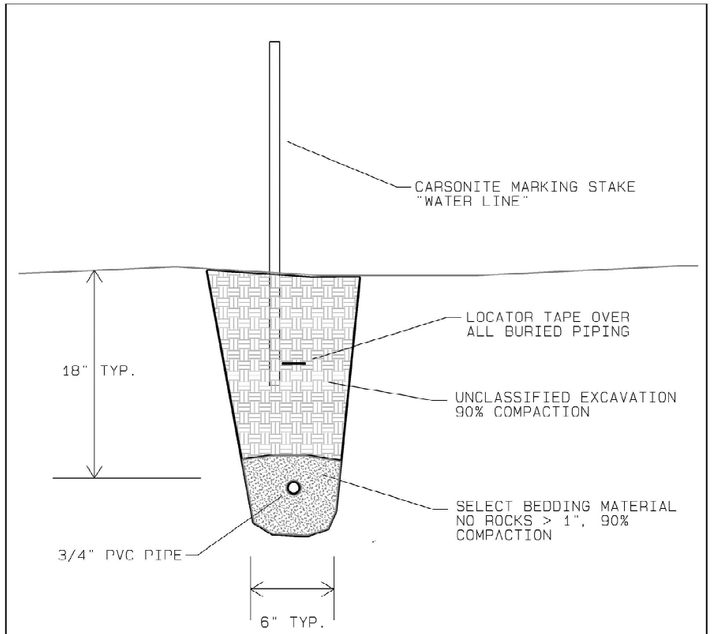

TYPICAL SECTION FOR IRRIGATION PIPES

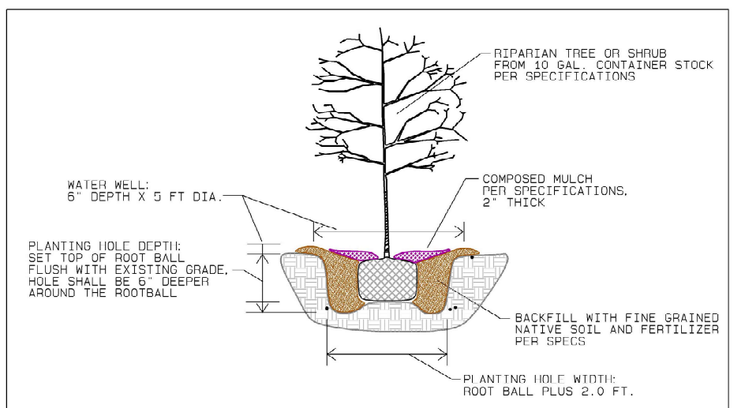

TREE OR SHRUB TRANSPLANT DETAIL
N.T.S.

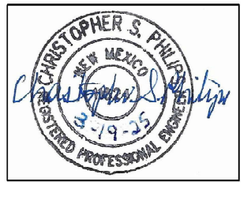

NO.	DATE	APPR.	REVISION	NO.	DATE	APPR.	REVISION
B	11/4/24		100% FINAL				
C	3/27/25		FOR-BID				

VILLAGE OF MADRID, NM
STORM WATER & EROSION CONTROL PROJECT

MADRID NEW MEXICO

RIVERBEND ENGINEERING, LLC

ALBUQUERQUE NEW MEXICO

CHECKED	CP	10/31/24	
DES. ENG.	CP	10/31/24	
PROJ. ENG.	CP	10/31/24	
PROJ. MGR.	RE	10/31/24	
APPROVED			
APPROVED			

CLIENT APPROVALS DATE

MADRID ARROYO
IRRIGATION & PLANTING PLAN
STANDARD DETAILS

DRAWN	DATE	DWG. NO.	REV. NO.
C.PHILIPS	----	C229	C
SCALE	W.O. NO. 15740.001.003	SHT. 79 of 83	

C:\Users\vadams\Weston Solutions, Inc\Engineering Community - AutoCAD\Projects\MADRID STORM\WATER\RIVERBEND 100% FINAL.dwg October 30, 2024 - 11:44am

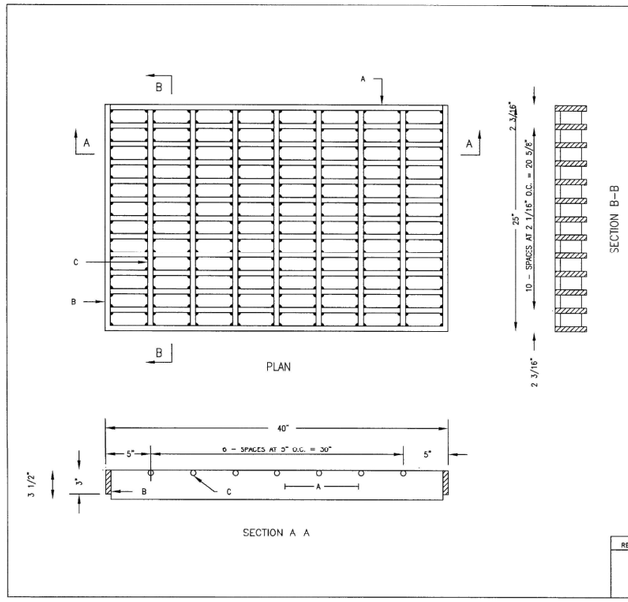

GENERAL NOTES:

1. ALL BARS SHALL BE STRUCTURAL GRADE STEEL, GRADE A36.
2. THE GRATE SHALL BE WELDED WITH 1/8" FILLET WELD AROUND BOTH SIDES OF CROSS BARS, 1/4". FILLET WELD BOTH SIDES OF BEARING BARS TO END BARS.
3. AFTER CLEANING SURFACE OF SCALE, RUST, OILS, ETC., PAINT GRATE WITH ONE SHOP COAT RED OXIDE, TWO FINISH COATS ALUMINUM PAINT (AASHTO M 69).
4. TOP OF CROSS BARS SHALL BE FLUSH WITH TOP OF GRATE.
5. GRIND WELDS FLUSH WITH BEARING BARS.
6. WHEN INSTALLED IN FRAME, PUSH TIGHT TO ONE SIDE, OTHER SIDE SHALL HAVE 1/2" MAX. OPENING. SPACERS WELDED TO FRAME MAY BE USED IF REQUIRED TO KEEP 1/2" SPACE OR LESS.

CONSTRUCTIION NOTES:

A. BEARING BARS, (13) 1/2" x 3 1/2" x 39".
B. END BARS, (2) 1/2" X 3" X 25".
C. CROSS BARS, (7) 1/2" DIA X 24".

REVISIONS	NM APWA DRAINAGE STORM INLET GRATE DWG. 2220 FEB. 2006

1 STORM INLET GRATE NM APWA STANDARD DETAIL

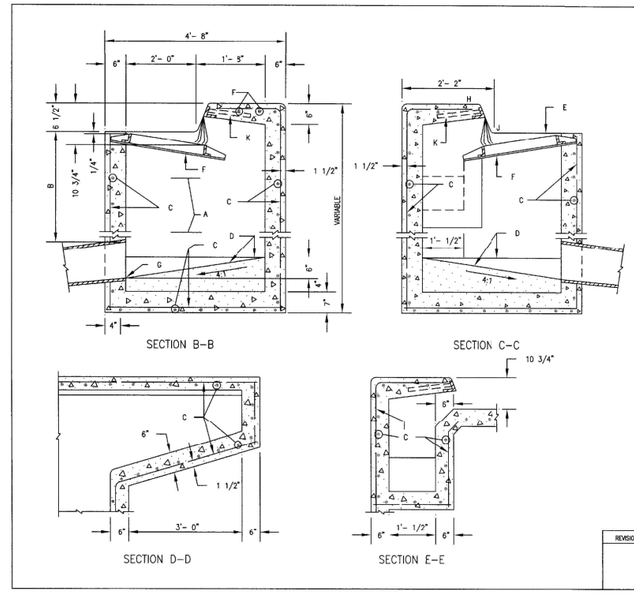

GENERAL NOTES:

1. SEE DWG. 2201 FOR PLAN AND SECTION A-A.
2. GENERAL NOTES 2, J & 4 ON DWG. 2201 ALSO APPLY TO THE DRAWING.
3. FOR ANCHOR DETAIL, SEE DWG. 2205.

CONSTRUCTION NOTES:

A. STORM INLET STEPS, SEE DWG. 2229 FOR SPACING.
B. 1'- 10" MIN. UNLESS OTHERWISE DIRECTED.
C. NO. 4 BARS AT 6" C. C. EACH WAY.
D. CONCRETE FILL, MINIMUM SLOPES SHOWN IN SECTIONS.
E. NORMAL GUTTER.
F. GRATE FRAME.
G. INVERT ELEVATION PER DESIGN.
H. TOP OF CURB.
J. FLOWLINE.
K. ANGLE ANCHOR.

REVISIONS	NM APWA DRAINAGE STORM INLET TYPE "A" SECTIONS B-B, C-C, D-D, & E-E DWG. 2202 FEB. 2006

2 STORM INLET (TYPE A) NM APWA STANDARD DETAIL

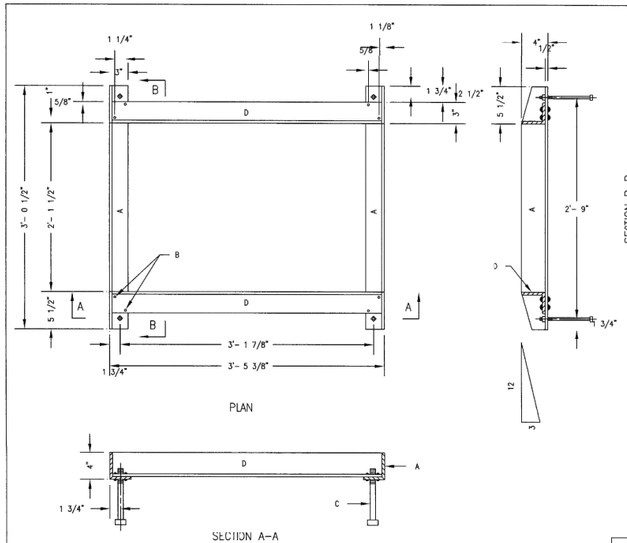

GENERAL NOTES:

1. ALL EXPOSED METAL PARTS SHALL BE PAINTED PRIOR TO ASSEMBLY. WELDING, MACHINING AND DRILLING SHALL BE DONE PRIOR TO PAINTING. ALL DIMENSIONS ARE FINISH DIMENSIONS.
2. ALL PARTS SHALL EE OF STRUCTURAL STEEL, GRADE 36.
3. FOR CLEANING AND PAINTING OF FRAME SEE DWG. 2215, GENERAL NOTE NO. 4.
4. FRAME MAY BE WELDED OR RIVETED.

CONSTRUCTION NOTES:

A. 4" X 3" X 1/2" X 3" 1/2" ∠.
B. 2 - 3/8" RIVETS AT EACH CORNER, SEE GENERAL NOTE NO. 5.
C. 4 - 1/2" X 8" BOLTS WITH SQUARE HEAD & NUT AT EACH CORNER. FOR ANCHORING FRAME INTO CONCRETE WALL.
D. 3 - 1/2" X 3" X 3/8" X 3'-4 3/8" ∠

REVISIONS	NM APWA DRAINAGE STORM INLET FRAME DWG. 2216 FEB. 2006

3 STORM INLET FRAME NM APWA STANDARD DETAIL

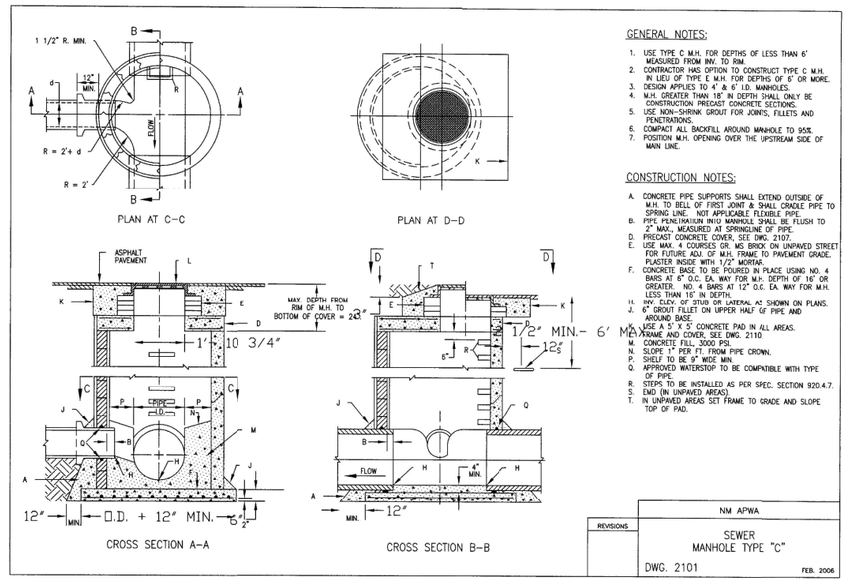

GENERAL NOTES:

1. USE TYPE C M.H. FOR DEPTHS OF LESS THAN 6' MEASURED FROM INV. TO RIM.
2. CONTRACTOR HAS OPTION TO CONSTRUCT TYPE C M.H. IN LIEU OF TYPE E M.H. FOR DEPTHS OF 6' OR MORE.
3. DESIGN APPLIES TO 4' & 6' I.D. MANHOLES.
4. M.H. GREATER THAN 18' IN DEPTH SHALL ONLY BE CONSTRUCTION PRECAST CONCRETE SECTIONS.
5. USE NON-SHRINK GROUT FOR JOINTS, FILLETS AND PENETRATIONS.
6. COMPACT ALL BACKFILL AROUND MANHOLE TO 95%.
7. POSITION M.H. OPENING OVER THE UPSTREAM SIDE OF MAIN LINE.

CONSTRUCTION NOTES:

A. CONCRETE PIPE SUPPORTS SHALL EXTEND OUTSIDE OF M.H. TO BELL OF FIRST JOINT & SHALL CRADLE PIPE TO SPRING LINE. NOT APPLICABLE FLEXIBLE PIPE.
B. PIPE PENETRATION INTO MANHOLE SHALL BE FLUSH TO 2" MAX., MEASURED AT SPRINGLINE OF PIPE.
D. PRECAST CONCRETE COVER, SEE DWG. 2107.
E. USE MAX. 4 COURSES CR. MS BRICK ON UNPAVED STREET FOR FUTURE ADJ. OF M.H. FRAME TO PAVEMENT GRADE. PLASTER INSIDE WITH 1/2" MORTAR.
F. CONCRETE BASE TO BE POURED IN PLACE USING NO. 4 BARS AT 6" O.C. EA. WAY FOR M.H. DEPTH OF 16' OR GREATER. NO. 4 BARS AT 12" O.C. EA. WAY FOR M.H. LESS THAN 16' IN DEPTH.
H. INV. ELEV. OF STUB OR LATERAL AS SHOWN ON PLANS.
J. 6" GROUT FILLET ON UPPER HALF OF PIPE AND AROUND BASE.
K. USE A 5' X 5' CONCRETE PAD IN ALL AREAS.
L. FRAME AND COVER, SEE DWG. 2110.
M. CONCRETE FILL, 3000 PSI.
N. SLOPE 1" PER FT. FROM PIPE CROWN.
P. SHELF TO BE 9" WIDE MIN.
Q. APPROVED WATERSTOP TO BE COMPATIBLE WITH TYPE OF PIPE.
R. STEPS TO BE INSTALLED AS PER SPEC. SECTION 920.4.7.
S. END (IN UNPAVED AREAS).
T. IN UNPAVED AREAS SET FRAME TO GRADE AND SLOPE TOP OF PAD.

REVISIONS	NM APWA SEWER MANHOLE TYPE "C" DWG. 2101 FEB. 2006

4 SEWER MANHOLE TYPE C NM APWA STANDARD DETAIL

NO.	DATE	APPR.	REVISION	NO.	DATE	APPR.	REVISION
B	11/4/24		100% FINAL				
C	3/27/25		FOR-BID				

VILLAGE OF MADRID, NM
STORM WATER & EROSION CONTROL PROJECT

MADRID NEW MEXICO

WESTON SOLUTIONS

ALBUQUERQUE NEW MEXICO

		DATE	CLIENT APPROVALS	DATE
CHECKED	NAH	10/31/24		
DES. ENG.	SLJ	10/31/24		
PROJ. ENG.	RGE	10/31/24		
PROJ. MGR.	TDB	10/31/24		
APPROVED				
APPROVED				

ROBERT G. FORES, NEW MEXICO, LICENSED PROFESSIONAL ENGINEER, 10/30/24

STANDARD DRAWINGS
(1 OF 4)

DRAWN	DATE	DWG. NO.	REV. NO.
RW	----	C601	C
SCALE	W.O. NO. 15740.001.003	SHT. 80 of 83	

C:\Users\rwilson\Weston Solutions, Inc\Engineering Community - AutoCAD\Projects\MADRID STORMWATER\MRG_FRONT-END.dwg October 30, 2024 - 11:51am

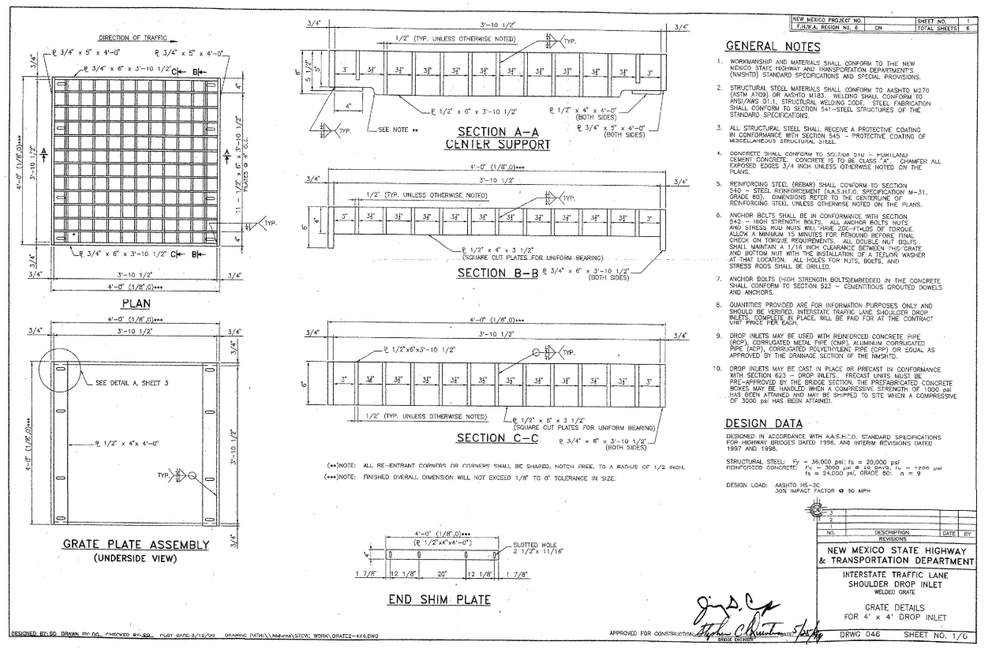

1 SHOULDER DROP INLET NMDOT STANDARD DETAIL (1/3)

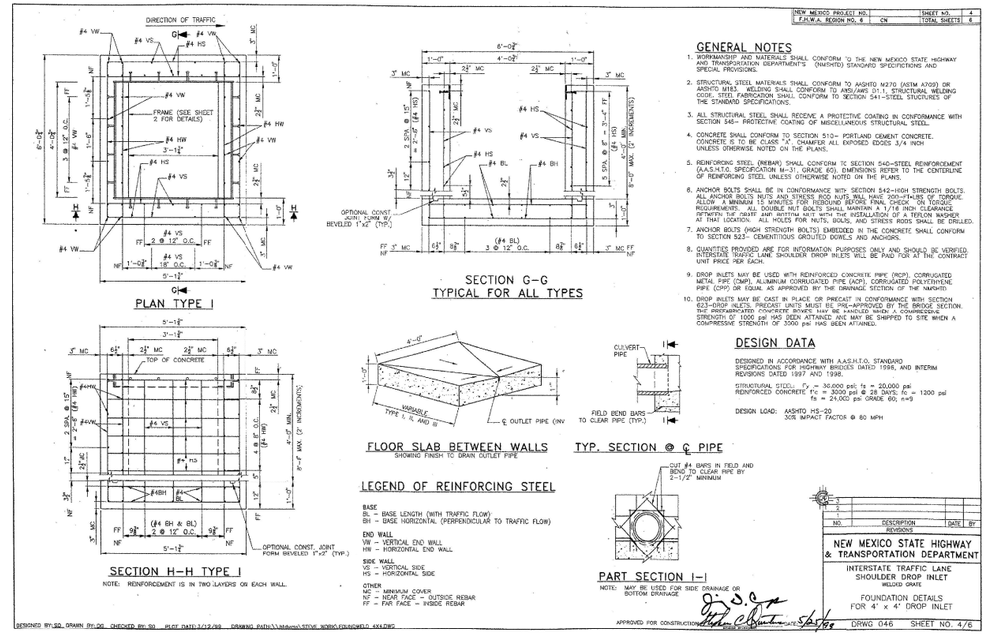

2 SHOULDER DROP INLET NMDOT STANDARD DETAIL (2/3)

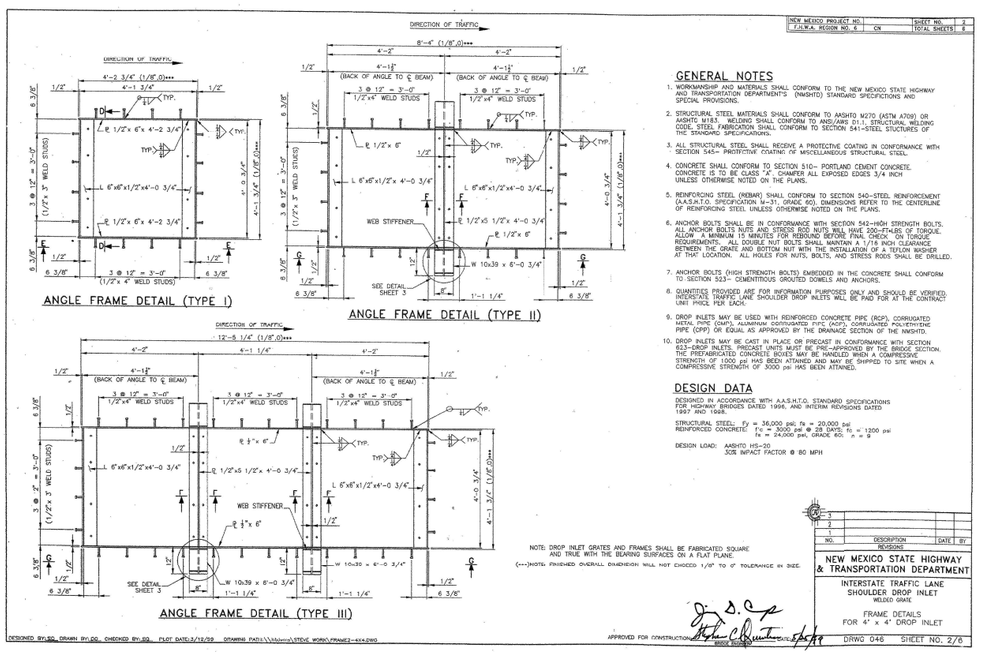

3 SHOULDER DROP INLET NMDOT STANDARD DETAIL (3/3)

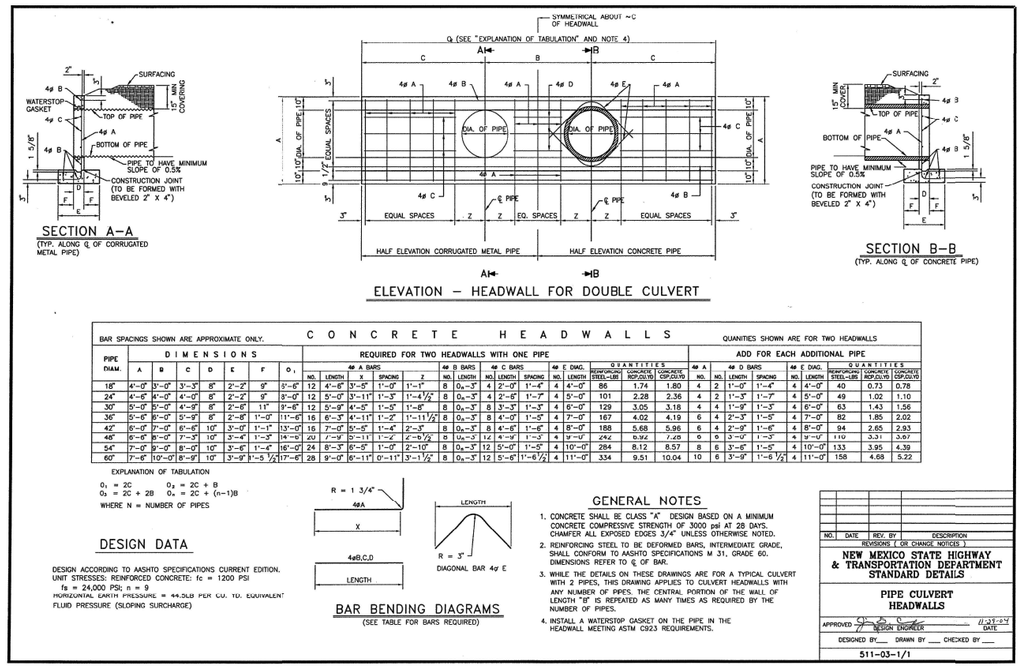

4 PIPE CULVERT NMDOT STANDARD DETAIL

NO.	DATE	APPR.	REVISION	NO.	DATE	APPR.	REVISION
B	11/4/24		100% FINAL				
C	3/27/25		FOR-BID				

VILLAGE OF MADRID, NM
STORM WATER & EROSION CONTROL PROJECT

MADRID NEW MEXICO

ALBUQUERQUE NEW MEXICO

		DATE	CLIENT APPROVALS	DATE
CHECKED	NAH	10/31/24		
DES. ENG.	SLJ	10/31/24		
PROJ. ENG.	RGE	10/31/24		
PROJ. MGR.	TDB	10/31/24		
APPROVED				
APPROVED				

ROBERT G. EDER — NEW MEXICO — REGISTERED PROFESSIONAL ENGINEER — 10/30/24

STANDARD DRAWINGS
(2 OF 4)

DRAWN	DATE	DWG. NO.	REV. NO.
RW	----	C602	C
SCALE	W.O. NO. 15740.001.003	SHT. 81 of 83	

C:\Users\weston\Weston Solutions, Inc\Engineering Community - AutoCAD\Projects\MADRID STORMWATER\MRG_FRONT-END.dwg October 30, 2024 - 11:51am

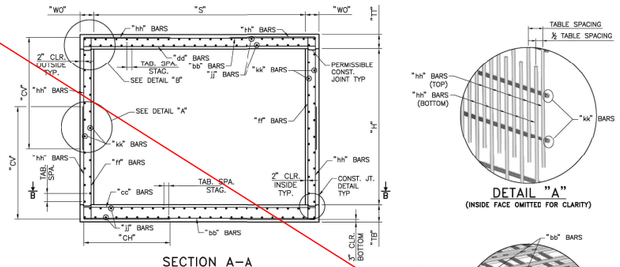

SECTION A–A

DETAIL "A"
(INSIDE FACE OMITTED FOR CLARITY)

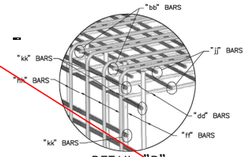

DETAIL "B"
(SIMILAR BOTTOM CORNERS)

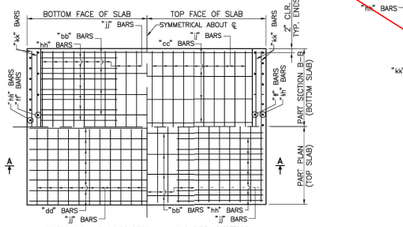

REBAR LAYOUT – PLAN VIEW

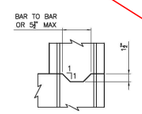

CONSTRUCTION JOINT DETAIL

GENERAL NOTES

1. ALL MATERIALS AND WORKMANSHIP SHALL CONFORM TO THE NEW MEXICO DEPARTMENT OF TRANSPORTATION SPECIFICATIONS FOR HIGHWAY AND BRIDGE CONSTRUCTION (CURRENT EDITION) WITH APPLICABLE SPECIAL PROVISIONS.
2. ALL CONCRETE SHALL BE CLASS "AA" (4000 psi). CHAMFER ALL EXPOSED EDGES ¾".
3. ALL REINFORCING STEEL TO BE DEFORMED BARS, CONFORMING TO AASHTO M–31, GRADE 60. ALL DIMENSIONS REFER TO THE CENTERLINE OF BAR.
4. "COVER" IS HEIGHT OF FILL FROM TOP OF BOX TO THE TOP OF PAVEMENT. ORIGINAL HEIGHT OF COVER MAY NOT BE EXCEEDED IN THE FUTURE OR WILL REQUIRE REMOVAL AND REPLACEMENT WITH PROPER DESIGN FILL CBC. IN CASE OF COVER EQUAL TO 10', 15', 20', OR 25' USE HIGHER DESIGN FILL IN CASE OF FUTURE AC OVERLAY.
5. "jj" AND "kk" BARS MAY BE SPLICED WHEN NECESSARY BY LAPPING AT LEAST 40 BAR DIAMETERS. NO OTHER SPLICING OF BARS WILL BE PERMITTED. LENGTH OF THESE BARS SHALL EQUAL THE LENGTH OF BARREL "L" PLUS (2 X "HW") MINUS 4" FOR TOTAL NEW CONSTRUCTION. NOT INCLUDING LAP LENGTH. FOR CULVERT EXTENSION, LENGTH OF THESE BARS SHALL BE "L" PLUS "HW" MINUS 2'.
6. REINFORCING SHOWN IS FOR PLACEMENT LOCATION ONLY. USE APPROPRIATE SHEETS AND CORRESPONDING TABLES TO DETERMINE THE REINFORCING REQUIREMENTS AND SPACINGS.
7. ALL CONSTRUCTION JOINTS SHALL BE AS PER DETAIL THIS SHEET. CONSTRUCTION JOINTS ARE PERMISSIBLE AND SHALL BE LOCATED AT WALL/SLAB HORIZONTAL INTERFACE.
8. DO NOT BACKFILL WALLS UNTIL TOP SLAB HAS REACHED 4000 psi DESIGN STRENGTH.
9. CBC'S SHALL BE CONSTRUCTED TO THE SPAN, HEIGHT, NUMBER OF BARRELS, SKEW, ALIGNMENT, AND FLOWLINE GRADE AS SPECIFIED ON THE PLAN AND PROFILE AND STRUCTURE PLACEMENT SECTIONS.
10. EXCAVATION AND BACKFILL OF CBC'S SHALL BE IN ACCORDANCE WITH STANDARD DRAWING 210–01–1/1.

DESIGN

DESIGNED IN ACCORDANCE WITH AASHTO LRFD BRIDGE DESIGN SPECIFICATIONS, THIRD EDITION.

PAYMENT

PAYMENT FOR CBC'S IS BASED ON "LIN. FT." UNIT OF MEASUREMENT FOR THE TOTAL LENGTH OF ALL NEW BARRELS CONSTRUCTED AT THE CENTERLINE OF BARREL. I.E. SINGLE BARREL SHALL BE 1 X "L" AND TRIPLE BARREL SHALL BE 3 X "L" FOR PAYMENT. LENGTH OF BARREL SHALL NOT INCLUDE "HW" WHICH SHALL BE PAID FOR SEPARATELY. CONCRETE, REBAR, FORMING, AND OTHER WORK AND MATERIAL SHALL BE INCLUDED IN THE LIN. FT. COST FOR THE CBC AND NO FURTHER PAYMENT SHALL BE MADE FOR THESE INCIDENTAL ITEMS.

ALTERNATIVELY, A COMPLETE CONCRETE BOX CULVERT MAY BE PAID FOR UNDER CLASS "AA" CONCRETE BY "CU. YD." ITEM 511030 AND GRADE 60 REBAR BY "LBS." ITEM 540060.

NO.	DATE	REV. BY	DESCRIPTION
			REVISIONS (OR CHANGE NOTICES)

NEW MEXICO
DEPARTMENT OF TRANSPORTATION
STANDARD DRAWING

CONCRETE BOX CULVERT SINGLE OPENING – DESIGN FILL "A" 0–10 FT
STRUCTURAL SECTIONS AND REBAR

APPROVED APR 9 '07
BRIDGE ENGINEER DATE

DESIGNED BY TLB DRAWN BY SGL CHECKED BY HDR

511–60–1/2 1 OF 2

1 CONCRETE BOX CULVERT BARRELS SINGLE OPENING NMDOT STANDARD DETAIL

SINGLE OPENING BOX CULVERT STRUCTURE DIMENSIONS				GRADE 60 REINFORCING BAR SCHEDULE (BAR SIZE, SPACING AND LENGTH DIMENSIONS)																
DIM	0–10 FT BURIAL DESIGN FILL "A"			"bb"		"cc"		"dd"		"bb", "cc" & "dd"		"ff"		"hh"				"jj"		"kk"	
SPAN "S" INSIDE	HEIGHT "H" INSIDE	TOP SLAB "T1"	BOTTOM SLAB "T1BF"	WALLS OUTER "WO"	SIZE	SPACING	SIZE	SPACING	SIZE	SPACING	LENGTH	SIZE	SPACING	LENGTH	SIZE	SPACING	"CH" LENGTH	"CV" LENGTH	SIZE	STAGGERED SPACING	SIZE	STAGGERED SPACING
4'	2'	7.5"	8.5"	7.5"	#4	12"	#4	6"	#4	6"	4'–11"	#4	12"	2'–11"	#4	6"	2'5"	2'5"	#4	6"	#4	6"
4'	3'	7.5"	8.5"	7.5"	#4	12"	#4	6"	#4	6"	4'–11"	#4	12"	3'–11"	#4	6"	25"	31"	#4	6"	#4	6"
4'	4'	7.5"	8.5"	7.5"	#4	12"	#4	6"	#4	6"	4'–11"	#4	12"	4'–11"	#4	6"	25"	37"	#4	6"	#4	6"
6'	2'	7.5"	8.5"	7.5"	#5	12"	#5	6"	#6	6"	6'–11"	#4	12"	2'–11"	#5	6"	30"	26"	#4	6"	#4	6"
6'	3'	7.5"	8.5"	7.5"	#5	12"	#5	6"	#6	6"	6'–11"	#4	12"	3'–11"	#5	6"	30"	32"	#4	6"	#4	6"
6'	4'	7.5"	8.5"	7.5"	#5	12"	#5	6"	#6	6"	6'–11"	#4	12"	4'–11"	#5	6"	30"	38"	#4	6"	#4	6"
6'	5'	7.5"	8.5"	7.5"	#5	12"	#5	6"	#6	6"	6'–11"	#4	12"	5'–11"	#5	6"	30"	44"	#4	6"	#4	6"
6'	6'	7.5"	8.5"	7.5"	#5	12"	#5	6"	#6	6"	6'–11"	#4	12"	6'–11"	#5	6"	30"	50"	#4	6"	#4	6"
6'	7'	7.5"	8.5"	7.5"	#5	12"	#5	6"	#6	6"	6'–11"	#4	12"	7'–11"	#5	6"	30"	56"	#4	6"	#4	6"
8'	4'	9.0"	9.5"	7.5"	#6	12"	#6	6"	#7	6"	8'–11"	#4	12"	5'–1"	#6	6"	36"	41"	#4	6"	#4	6"
8'	5'	9.0"	9.5"	7.5"	#6	12"	#6	6"	#7	6"	8'–11"	#4	12"	6'–1"	#6	6"	36"	47"	#4	6"	#4	6"
8'	6'	9.0"	9.5"	7.5"	#6	12"	#6	6"	#7	6"	8'–11"	#4	12"	7'–1"	#6	6"	36"	53"	#4	6"	#4	6"
8'	7'	9.0"	9.5"	7.5"	#6	12"	#6	6"	#7	6"	8'–11"	#4	12"	8'–1"	#6	6"	36"	59"	#4	6"	#4	6"
8'	8'	9.0"	9.5"	7.5"	#6	12"	#6	6"	#7	6"	8'–11"	#4	12"	9'–1"	#6	6"	36"	65"	#4	6"	#4	6"
10'	3'	9.0"	9.5"	7.5"	#7	12"	#8	6"	#8	6"	10'–11"	#4	12"	4'–1"	#7	6"	43"	38"	#4	6"	#4	6"
10'	4'	9.0"	9.5"	7.5"	#7	12"	#8	6"	#8	6"	10'–11"	#4	12"	5'–1"	#7	6"	43"	44"	#4	6"	#4	6"
10'	5'	9.0"	9.5"	7.5"	#7	12"	#8	6"	#8	6"	10'–11"	#4	12"	6'–1"	#7	6"	43"	50"	#4	6"	#4	6"
10'	6'	9.0"	9.5"	7.5"	#7	12"	#8	6"	#8	6"	10'–11"	#4	12"	7'–1"	#7	6"	43"	56"	#4	6"	#4	6"
• 10'	7'	9.0"	9.5"	7.5"	#7	12"	#8	6"	#8	6"	10'–11"	#4	12"	8'–1"	#7	6"	43"	62"	#4	6"	#4	6"
10'	8'	9.5"	10.0"	9.0"	#8	12"	#8	6"	#8	6"	11'–2"	#5	6"	9'–2"	#8	6"	53"	72"	#4	6"	#4	6"
10'	9'	9.5"	10.0"	9.0"	#8	12"	#8	6"	#8	6"	11'–2"	#5	6"	10'–2"	#8	6"	53"	78"	#4	6"	#4	6"
10'	10'	9.5"	10.0"	9.0"	#8	12"	#8	6"	#8	6"	11'–2"	#5	6"	11'–2"	#8	6"	53"	84"	#4	6"	#4	6"
10'	11'	9.5"	10.0"	9.0"	#8	12"	#8	6"	#8	6"	11'–2"	#5	6"	12'–2"	#8	6"	53"	90"	#4	6"	#4	6"
10'	12'	9.5"	10.0"	9.0"	#8	12"	#8	6"	#8	6"	11'–2"	#5	6"	13'–2"	#8	6"	53"	96"	#4	6"	#4	6"
12'	6'	10.0"	11.0"	9.5"	#8	12"	#9	6"	#9	6"	13'–3"	#4	6"	7'–4"	#8	6"	56"	61"	#4	6"	#4	6"
12'	7'	10.0"	11.0"	9.5"	#8	12"	#9	6"	#9	6"	13'–3"	#4	6"	8'–4"	#8	6"	56"	67"	#4	6"	#4	6"
12'	8'	10.0"	11.0"	9.5"	#8	12"	#9	6"	#9	6"	13'–3"	#4	6"	9'–4"	#8	6"	56"	73"	#4	6"	#4	6"
12'	9'	10.0"	11.0"	9.5"	#8	12"	#9	6"	#9	6"	13'–3"	#4	6"	10'–4"	#8	6"	56"	79"	#4	6"	#4	6"
12'	10'	10.0"	11.0"	9.5"	#8	12"	#9	6"	#9	6"	13'–3"	#4	6"	11'–4"	#8	6"	56"	85"	#4	6"	#4	6"
12'	12'	10.0"	11.0"	9.5"	#8	12"	#9	6"	#9	6"	13'–3"	#4	6"	13'–4"	#8	6"	56"	97"	#4	6"	#4	6"
14'	8'	11.0"	12.0"	10.5"	#9	12"	#9	6"	#9	6"	15'–5"	#5	6"	9'–6"	#9	6"	101"	79"	#4	6"	#4	6"
14'	9'	11.0"	12.0"	10.5"	#9	12"	#9	6"	#9	6"	15'–5"	#5	6"	10'–6"	#9	6"	101"	85"	#4	6"	#4	6"
14'	10'	11.0"	12.0"	10.5"	#9	12"	#9	6"	#9	6"	15'–5"	#5	6"	11'–6"	#9	6"	101"	91"	#4	6"	#4	6"
14'	11'	11.0"	12.0"	10.5"	#9	12"	#9	6"	#9	6"	15'–5"	#5	6"	12'–6"	#9	6"	101"	97"	#4	6"	#4	6"
14'	12'	11.0"	12.0"	10.5"	#9	12"	#9	6"	#9	6"	15'–5"	#5	6"	13'–6"	#9	6"	101"	103"	#4	6"	#4	6"
14'	13'	11.0"	12.0"	10.5"	#9	12"	#9	6"	#9	6"	15'–5"	#5	6"	14'–6"	#9	6"	101"	109"	#4	6"	#4	6"
14'	14'	11.0"	12.0"	10.5"	#9	12"	#9	6"	#9	6"	15'–5"	#5	6"	15'–6"	#9	6"	101"	115"	#4	6"	#4	6"

FOR EXTENSIONS OF EXISTING CBC'S OF S=5', S=7', AND S=9' SIZE SPANS NOT INCLUDED IN THIS TABLE, USE DIMENSIONS FOR NEXT GREATER SPAN TO BUILD. FOR EXAMPLE: FOR S=5' USE DESIGN DIMENSIONS FROM THE TABLE FOR S=6'. ALSO REDUCE THE S=6' TABLE LENGTH OF BARS "bb", "cc" AND "dd" BY ONE FOOT TO ACCOMMODATE THE SHORTER SPAN. SEE DETAILS ON SHEET 511–66–4/6. ANY OTHER SIZES OF BOX EXTENSIONS NOT COVERED BY THIS MODIFICATION SHALL BE DONE THROUGH SPECIAL DESIGNS INCLUDED IN THE PROJECT PLANS.

• EXAMPLE OF USE OF THIS TABLE:
PROPOSED STRUCTURE: SINGLE BARREL, 10 FT. SPAN, 7 FT. HEIGHT, CBC WITH 2 FT. DEPTH OF COVER.
USE THE FOLLOWING BUILD INFORMATION FROM THE TABLE ABOVE:

DIM	0–10 FT BURIAL DESIGN FILL "A"			"bb"		"cc"		"dd"		"bb", "cc" & "dd"		"ff"		"hh"				"jj"		"kk"	
SPAN "S" INSIDE	HEIGHT "H" INSIDE	TOP SLAB "T1"	BOTTOM SLAB "T1BF"	WALLS OUTER "WO"	SIZE	SPACING	SIZE	SPACING	SIZE	SPACING	LENGTH	SIZE	SPACING	LENGTH	SIZE	SPACING	"CH" LENGTH	"CV" LENGTH	SIZE	STAGGERED SPACING	SIZE	STAGGERED SPACING
10'	7'	9.0"	9.5"	7.5"	#7	12"	#8	6"	#8	6"	10'–11"	#4	12"	8'–1"	#7	6"	43"	62"	#4	6"	#4	6"

NO.	DATE	REV. BY	DESCRIPTION
			REVISIONS (OR CHANGE NOTICES)

NEW MEXICO
DEPARTMENT OF TRANSPORTATION
STANDARD DRAWING

CONCRETE BOX CULVERT SINGLE OPENING – DESIGN FILL "A" 0–10 FT
DIMENSIONS AND REBAR SCHEDULE

APPROVED APR 9 '07
BRIDGE ENGINEER DATE

DESIGNED BY TLB DRAWN BY SGL CHECKED BY HDR

511–60–2/2 2 OF 2

2 CONCRETE BOX CULVERT BARRELS SINGLE OPENING NMDOT STANDARD DETAIL

N.I.C.

NO.	DATE	APPR.	REVISION	NO.	DATE	APPR.	REVISION

VILLAGE OF MADRID, NM
STORM WATER & EROSION CONTROL PROJECT
MADRID NEW MEXICO

WESTON SOLUTIONS
ALBUQUERQUE NEW MEXICO

CHECKED	NAH	DATE 10/31/24	CLIENT APPROVALS
DES. ENG.	SLJ	10/31/24	
PROJ. ENG.	RGE	10/31/24	
PROJ. MGR.	TDB	10/31/24	
APPROVED			
APPROVED			

ROBERT G. FOERSTER
NEW MEXICO
REGISTERED PROFESSIONAL ENGINEER
10/30/24

STANDARD DRAWINGS
(3 OF 4)

DRAWN	DATE	DWG. NO.	REV. NO.
RW	----	C603	B
SCALE	W.O. NO. 15740.001.003	SHT. 82 of 83	

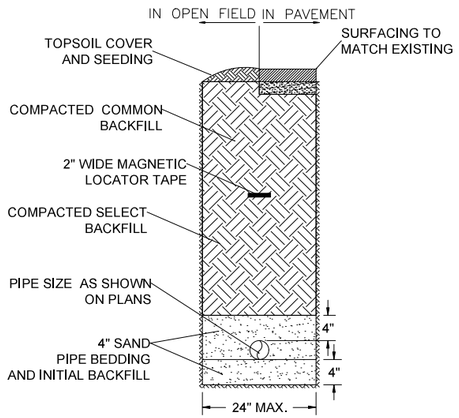

1 WATER CONVEYANCE PIPE TRENCH
TYPICAL SECTION (N.T.S.)

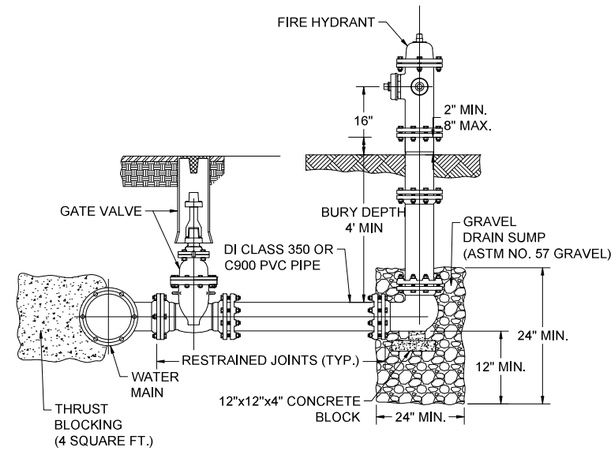

3 FIRE HYDRANT REPLACEMENT DETAIL
DETAIL (N.T.S.)

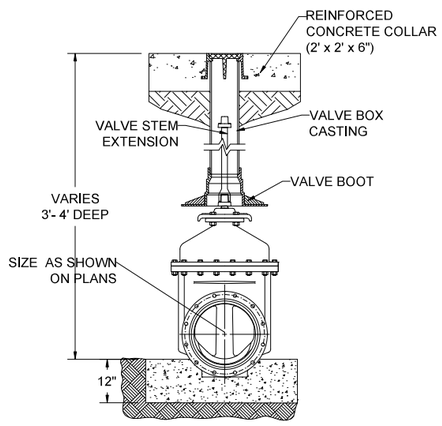

2 BURIED GATE VALVE DETAIL
DETAIL (N.T.S.)

NO.	DATE	APPR.	REVISION	NO.	DATE	APPR.	REVISION
A	5/10/24		100% DRAFT- ISSUED FOR REVIEW				
B	11/4/24		100% FINAL				
C	3/27/25		FOR-BID				

VILLAGE OF MADRID, NM
STORM WATER & EROSION CONTROL PROJECT

MADRID NEW MEXICO

WESTON SOLUTIONS

ALBUQUERQUE NEW MEXICO

CHECKED	NAH	DATE	10/31/24	CLIENT APPROVALS	DATE
DES. ENG.	SLJ		10/31/24		
PROJ. ENG.	RGE		10/31/24		
PROJ. MGR.	TDB		10/31/24		
APPROVED					
APPROVED					

ROBERT G. FOERSTNER
NEW MEXICO
REGISTERED PROFESSIONAL ENGINEER
10/30/24

STANDARD DRAWINGS
(4 OF 4)

DRAWN	DATE	DWG. NO.	REV. NO.
RW	----	C604	C
SCALE	W.O. NO. 15740.001.003	SHT. 83 of 83	

C:\Users\waters\Weston Solutions, Inc\Engineering Community - AutoCAD\Projects\MADRID STORMWATER\M00_FRONT-END.dwg October 30, 2024 - 11:51am