NEW MEXICO ABANDONDED LAND MINE PROGRAM
BOSTON HILL MINE SAFEGUARD PROJECT (PHASE I)

SILVER CITY, NEW MEXICO

MAY 2022

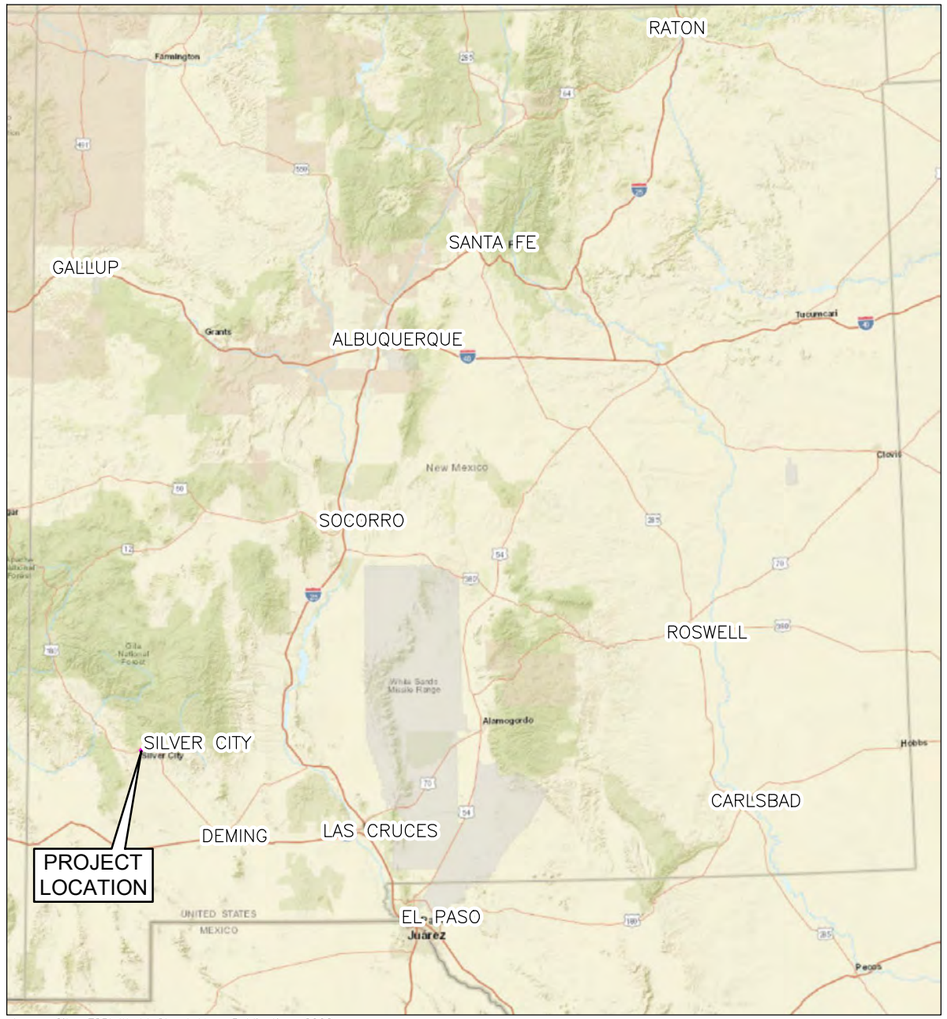

Image Cite: ESRI World Street Map, Publication: 2022

1 NEW MEXICO STATE MAP
SCALE: 1" = 60 MILES

N

0 60 MILES

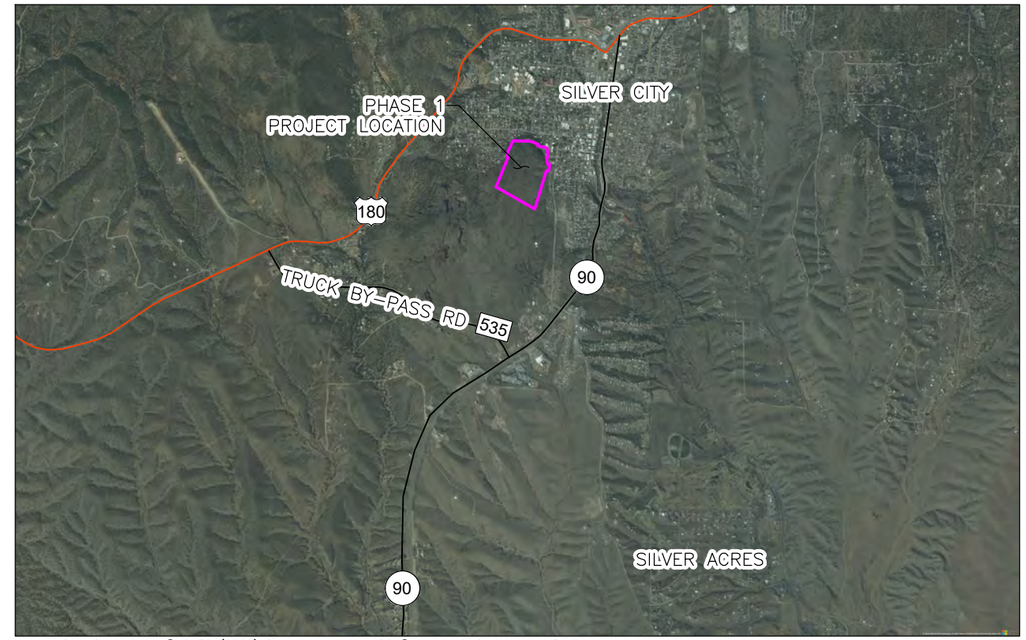

Image Cite: DigitalGlobe © CNES (2022) Distribution Airbus DS © Microsoft Corporation, BING Imagery

2 PROJECT LOCATION MAP
SCALE: 1" = 1 MILE

N

0 1 MILE

90% DRAFT
NOT FOR
CONSTRUCTION

CERTIFICATE OF ENGINEER

STATE OF NEW MEXICO

I, CAMERON TWING HEREBY STATE TO THE BEST OF MY KNOWLEDGE AND UNDERSTANDING THAT THIS DESIGN AND ACCOMPANYING DRAWINGS HAVE BEEN PREPARED BY ME OR UNDER MY DIRECT SUPERVISION IN ACCORDANCE WITH STANDARD AND GENERALLY ACCEPTED ENGINEERING PRACTICES AND PROCEDURES IN EFFECT AT THE TIME.

811 Know what's below. Call before you dig.

CALL US AT:
800-321-2537
or 811
www.nm811.org

REV.	DATE	DESCRIPTION	BY	CHK'D
0	05/02/2022	PHASE I 90% DESIGN SUBMITTAL	JD	TH

REVISIONS

DRAWN BY: JD
CHECKED BY: TH
DATE: 4/27/2022
SCALE: AS SHOWN
FILE: 01A-BOSTON_TITLE

Trihydro
1252 Commerce Drive
Laramie, Wyoming 82070
www.trihydro.com
(P) 307/745.7474 (F) 307/745.7729

COVER SHEET

BOSTON HILL MINE SAFEGUARD PROJECT (PHASE I)
NEW MEXICO ABANDONDED LAND MINE PROGRAM
SILVER CITY, NEW MEXICO

TITLE

REV: 0

L:\NEW MEXICO – AML – DOCUMENTS\BOSTONHILL\CADD\PLANSET\01A-BOSTON_TITLE

EXPLANATION

EXISTING

- SITE ACCESS ROAD
- 180 U.S. HIGHWAY
- 90 STATE HIGHWAY
- 535 COUNTY HIGHWAY
- 7210 SURFACE CONTOURS (INTERVAL = 1 FOOT)
- EXISTING FENCE
- EXISTING TRAILS
- PHASE I BOUNDARY
- BUILDING OR OTHER STRUCTURE
- 1 / 14 VIEW DESIGNATION / SHEET NUMBER
- 4 SINGLE VIEW SHEET / SHEET NUMBER

PROPOSED

- TEMPORARY ACCESS ROUTE
- PROPOSED CABLE MESH LAYOUT
- PROPOSED FENCE
- 7210 PROPOSED SURFACE CONTOURS (INTERVAL = 1 FOOT)
- STEEL
- METAL GRATE CLOSURE AREA
- STEEL MESH AREA
- WASTE ROCK
- ADIT FILL WITH PUF AND SACKRETE
- ADIT FILL WITH PUF
- VERTICAL ADIT FILL WITH PUF
- HB HAND BACKFILL LOCATION
- MACHINE BACKFILL LOCATION
- METAL GRATE CLOSURE
- MACHINE BACKFILL AREA
- WASTE ROCK AREA
- EXISTING GROUND
- POLYURETHANE FOAM (PUF)
- EXISTING CHAIN LINK FENCE REPAIR LOCATION
- WASTE ROCK BORROW LOCATION
- METAL BARRIER FENCE
- CABLE MESH CLOSURE
- EGRESS ADIT CLOSURE
- ADIT STOPE METAL GRATE CLOSURE
- ADIT STOPE METAL GRATE AREA
- PROPOSED STAGING AREA
- CONCRETE
- BACKSTOP

NOTES:

1. GENERAL:
   - A. CONTRACTOR SHALL CALL NEW MEXICO "CALL BEFORE YOU DIG" AT (800) 321-2537 OR 811 PRIOR TO INTRUSIVE ACTIVITIES TO LOCATE ON-SITE UTILITIES. CONTRACTOR IS RESPONSIBLE FOR LOCATING ALL UTILITIES. THE ENGINEER AND OWNER DO NOT MAKE ANY REPRESENTATIONS AS TO EXISTENCE OR NON-EXISTENCE OF UTILITIES WITHIN THE PROJECT AREA.
   - B. THE CONTRACTOR'S PERSONNEL SHALL NOT BE ALLOWED TO MAINTAIN RESIDENCES ON SITE.
   - C. THE CONTRACTOR SHALL NOT DISTURB AREAS OUTSIDE THE PROJECT AREA. THE CONTRACTOR SHALL RECLAIM OR REPAIR ALL DISTURBANCES CREATED OUTSIDE THE PROJECT AREA BY THE CONTRACTOR'S EMPLOYEES OR SUBCONTRACTORS AT THE CONTRACTOR'S EXPENSE. DISTURBANCE OUTSIDE OF THE PROJECT BOUNDARIES SHOWN ON THE SITE PLANS WILL NOT BE ALLOWED.
   - D. THE CONTRACTOR SHALL USE EXISTING ACCESS ROADS FOR EQUIPMENT, PERSONNEL, AND MATERIALS TRANSPORTATION. THE CONTRACTOR SHALL REPAIR ANY DAMAGE TO ACCESS ROADS AND IMPROVEMENTS CAUSED BY THE CONTRACTOR. IF ANY NEW ACCESS OR HAUL ROADS ARE REQUIRED TO COMPLETE THE WORK, THEY SHALL FIRST BE APPROVED BY THE ENGINEER, AND SHALL BE RECLAIMED ACCORDING TO THE SPECIFICATIONS AT THE COMPLETION OF THE PROJECT.
   - E. QUANTITIES SHOWN ARE ESTIMATES FOR BIDDING PURPOSES ONLY.
   - F. NO OTHER ACCESS TO THE SITE IS ALLOWED WITHOUT PERMISSION IN WRITING FROM THE ENGINEER AND/OR LANDOWNERS.
   - G. ALL TRASH AND DEBRIS GENERATED BY THE CONTRACTOR SHALL BE DISPOSED OF IN A LICENSED OFF-SITE LANDFILL. TRASH INCLUDES CIGARETTE BUTTS, BOTTLES, WRAPPERS, AND OTHER MATERIALS. TRASH MAY NOT BE BURIED ON-SITE.
   - H. THE CONTRACTOR SHALL DECONTAMINATE ALL EQUIPMENT AND SUPPORT VEHICLES PRIOR TO MOBILIZING TO THE SITE. EQUIPMENT AND SUPPORT VEHICLES SHALL BE FREE OF WEEDS, ORGANIC MATERIAL, AND DIRT. THE ENGINEER WILL INSPECT THE EQUIPMENT AND VEHICLES PRIOR TO ALLOWING THEM ON SITE. ANY EQUIPMENT OR VEHICLES FOUND, IN THE ENGINEER'S JUDGEMENT, TO NOT BE ADEQUATELY DECONTAMINATED SHALL NOT BE ALLOWED ON SITE.
   - I. EXISTING SITE TOPOGRAPHY WAS SURVEYED BY TRIHYDRO CORPORATION ON MAY 25, 2021. THE DRAWINGS DO NOT PURPORT TO SHOW ALL OBJECTS EXISTING ON, ABOVE, OR AROUND THE SITE.
   - J. PARCEL BOUNDARIES WERE OBTAINED FROM THE GRANT COUNTY ASSESSOR'S OFFICE IN FEBRUARY 2016. PROPERTY LINES SHOULD BE CONSIDERED APPROXIMATE. POTENTIAL RIGHT-OF-WAYS ARE NOT SHOWN ON THESE DRAWINGS. CONTRACTOR IS RESPONSIBLE FOR LOCATING RIGHT-OF-WAYS DURING UTILITY LOCATES.
   - K. THE BOSTON HILL PHASE I AREA CONTAINS A LARGE PUBLIC, MULTI-USE TRAIL NETWORK. THE CONTRACTOR SHALL TAKE ADDITIONAL PRECAUTIONS WHEN WORKING AROUND THE TRAIL NETWORK AS TO LIMIT DISTURBANCE TO TRAILS. CONTRACTOR ACCESS ROUTE AND EARTHWORK AREAS THAT FALL ON, CROSSING, OR IMMEDIATELY ADJACENT TO EXISTING TRAILS SHALL BE APPROVED BY THE ENGINEER.
   - L. THE ENGINEER WILL PROVIDE LOCATIONS FOR ALL PROPOSED RECLAMATION TASKS TO THE CONTRACTOR.
2. SAFETY:
   - A. THIS PROJECT REQUIRES CONSTRUCTION WORK IN THE VICINITY OF HISTORIC AND ACTIVE MINE SITES, HIGHWALLS, AND WATER BODIES. THE CONTRACTOR SHALL BE RESPONSIBLE FOR INVESTIGATING THE SITE CONDITIONS AND SCHEDULING THEIR EQUIPMENT, OPERATIONS, PERSONNEL, AND SAFETY PROCEDURES TO PREVENT ACCIDENTS AND INJURIES. THE CONTRACTOR SHALL FOLLOW ALL APPLICABLE OSHA REGULATIONS.
   - B. THE PROJECT AREA LIES WITHIN A WELL-USED PUBLIC RECREATION AREA KNOWN AS THE BOSTON HILL OPEN SPACE. THIS OPEN SPACE IS OWNED BY THE CITY OF SILVER CITY AS WELL AS THE BUREAU OF LAND MANAGEMENT. THE CONTRACTOR SHALL BE AWARE THAT THERE IS A HEAVY PUBLIC PRESCENSE WITHIN THE PROJECT AREA. THE CONTRACTOR SHALL TAKE EXTRA PRECAUTION AROUND KNOWN PUBLIC AREAS SUCH AS TRAILS. THE CONTRACTOR SHALL MARK ALL ACTIVE WORK ZONES WITH CONES, TEMPORARY FENCING, OR OTHER BARRICADES AS APPROVED BY THE ENGINEER.
   - C. THERE ARE SIGNS OF HUMAN HABITATION AT SEVERAL OF THE FEATURES PROPOSED FOR CLOSURE AND RECLAMATION. THE CONTRACTOR SHALL INSPECT EACH CLOSURE BEFORE AND DURING CONSTRUCTION FOR HABITATION AND REPORT ANY SIGNS OF RECENT HABITATION TO THE ENGINEER. IF THE CONTRACTOR DISCOVERS A FEATURE CURRENTY BEING HABITATED, THEY SHALL CONTACT THE LOCAL AUTHORITIES AND THE ENGINEER.
3. CONSTRUCTION:
   - A. ALL FENCING REMOVED OR RELOCATED DURING THE WORK SHALL BE REPLACED TO ITS NEW FENCE STANDARDS. THE ENGINEER SHALL APPROVE ALL FENCE REMOVAL. TEMPORARY FENCING FOR PUBLIC ACCESS CONTROL SHALL BE INSTALLED WHERE NECESSARY.
   - B. TOPSOIL FROM IDENTIFIED EARTHWORK AND STAGING AREAS SHALL BE STRIPPED TO A DEPTH OF 6± INCHES OR AS APPROVED BY THE ENGINEER AND STOCKPILED. TOPSOIL STOCKPILES SHALL BE UNIFORMLY SHAPED AND PROTECTED FROM SITE TRAFFIC. ALL DISTURBED AREAS SHALL BE REVEGETATED PER SPECIFICATIONS, INCLUDING AREAS ASSOCIATED WITH THE CONTRACTOR'S STAGING AREA AND MATERIALS.
   - C. THE CONTRACTOR SHALL CONFINE CONSTRUCTION STAGING AREA AND MATERIALS LAY DOWN TO THE AREAS IDENTIFIED ON THE PLANS AND APPROVED BY THE ENGINEER IN THE FIELD. THE CONTRACTOR IS RESPONSIBLE FOR THE CONTRACTOR'S OWN WORK AREA, STORAGE AREA, AND MAINTAINING SECURITY. THE STAGING AREA MAY BE FENCED AT THE CONTRACTOR'S DISCRETION AND IT WILL BE GUARDED AND MAINTAINED BY THE CONTRACTOR TO ADEQUATELY PREVENT LOSS OR DAMAGE TO THE CONTRACTOR'S EQUIPMENT AND MATERIALS
   - D. THE CONTRACTOR SHALL BE AWARE THAT HISTORIC MINING AND RECLAMATION DEBRIS SUCH AS CONCRETE, WOOD, METAL, ETC. MAY BE ENCOUNTERED. THE CONTRACTOR SHALL DISPOSE OF THESE MATERIALS AS APPROVED BY THE ENGINEER. DEBRIS SHALL NOT BE DISTURBED WITHOUT THE APPROVAL OF THE ENGINEER. DEBRIS REMOVAL AND DISPOSAL WILL BE IN ACCORDANCE WITH THE SPECIFICATIONS.
   - E. THE ENGINEER WILL DETERMINE MATERIALS CLASSIFICATIONS IN THE FIELD. TOPSOIL/COVERSOIL IS ANY MATERIAL SUITABLE FOR PLANT GROWTH MEDIUM AS DETERMINED BY THE ENGINEER. THE REMAINING MATERIAL IS TERMED UNCLASSIFIED, OR ROCK DEPENDING ON MATERIAL AND SOIL CONDITIONS. THESE SOILS ARE NOT SUITABLE MEDIUM FOR PLANT GROWTH. NOTE: COVERSOIL = TOPSOIL IN ALL REFERENCES IN THESE PLANS.
   - F. THE CONTRACTOR SHALL NOT REMOVE OR DESTROY ANY SURVEY MONUMENTS WITHOUT PRIOR WRITTEN PERMISSION FROM THE ENGINEER.
   - G. SURFACE GRADING AREAS WILL BE FINISH GRADED, TOPSOILED, AND SEEDED AS DIRECTED BY THE SPECIFICATIONS AND THE ENGINEER.
   - H. ALL MEASUREMENTS OF AGRICULTURAL ITEMS WILL BE BASED UPON THE ACTUAL SURFACE AREA.
   - M. STOCKPILE AREAS WILL BE LOCATED IN THE FIELD AND APPROVED BY ENGINEER.
   - N. TOPSOIL STOCKPILE SHALL BE SURVEYED BY ENGINEER PRIOR TO PLACEMENT FOR QUANTITY CALCULATIONS AND TO PROVIDE THE CONTRACTOR WITH PLACEMENT DEPTHS.
   - O. IN AREAS WHERE PROPOSED GRADING/BACKFILLING DAYLIGHTS TO EXISTING GROUND, THE CONTRACTOR SHALL CONSTRUCT A SMOOTH TRANSITION BOTH VERTICALLY AND HORIZONTALLY.

1 INDEX OF SHEETS

ABBREVIATIONS

℄	CENTER LINE	FT.	FEET
CY	CUBIC YARD	LFT.	LINEAR FOOT
CLR.	CLEARANCE	HORIZ.	HORIZONTAL
ø	DIAMETER	MAX.	MAXIMUM
DIM.	DIMENSION	MIN.	MINIMUM
EA.	EACH	PUF	POLYURETHANE FOAM
EG	EXISTING GRADE	SF.	SQUARE FOOT
EL./ELEV.	ELEVATION	SHT.	SHEET
EX.	EXISTING	TYP.	TYPICAL

CAUTION - THIS PROJECT REQUIRES CONSTRUCTION WORK IN, AROUND, AND OVER HAZARDOUS AND UNPROTECTED MINE SHAFTS, STOPES, ADITS, AND OTHER OPENINGS WHICH MAY BE OPEN TO THE SURFACE OR HIDDEN FROM VIEW BY TRASH, DEBRIS, OR THIN AND UNSTABLE LAYERS OF SURFACE MATERIALS OR ROCK. THE CONTRACTOR SHALL BE RESPONSIBLE FOR THROUGHLY INVESTIGATING THE SITE CONDITIONS AND SCHEDULING EQUIPMENT, EQUIPMENT OPERATIONS, PERSONNEL AND SAFETY PROCEDURES TO PREVENT ACCIDENTS AND INJURIES.

REV.	DATE	DESCRIPTION	BY	CHK'D
0	5/5/2022	PHASE I 90% DESIGN SUBMITTAL	JD	TH

REVISIONS

DRAWN BY: JD
CHECKED BY: TH
DATE: 5/5/2022
SCALE: NONE
FILE: 01A-BOSTON_EXPLANATION

Trihydro CORPORATION
1252 Commerce Drive
Laramie, Wyoming 82070
www.trihydro.com
(P) 307.745.7474 (F) 307.745.7729

INDEX OF SHEETS, EXPLANATION, AND NOTES

BOSTON HILL MINE SAFEGUARD PROJECT (PHASE I)
NEW MEXICO ABANDONED LAND MINE PROGRAM
SILVER CITY, NEW MEXICO

SHEET 1 1 OF 33

REV: 0

L:\NEW MEXICO – AML – DOCUMENTS\BOSTONHILL\CADD\PLANSET\01A–BOSTON_EXPLANATION

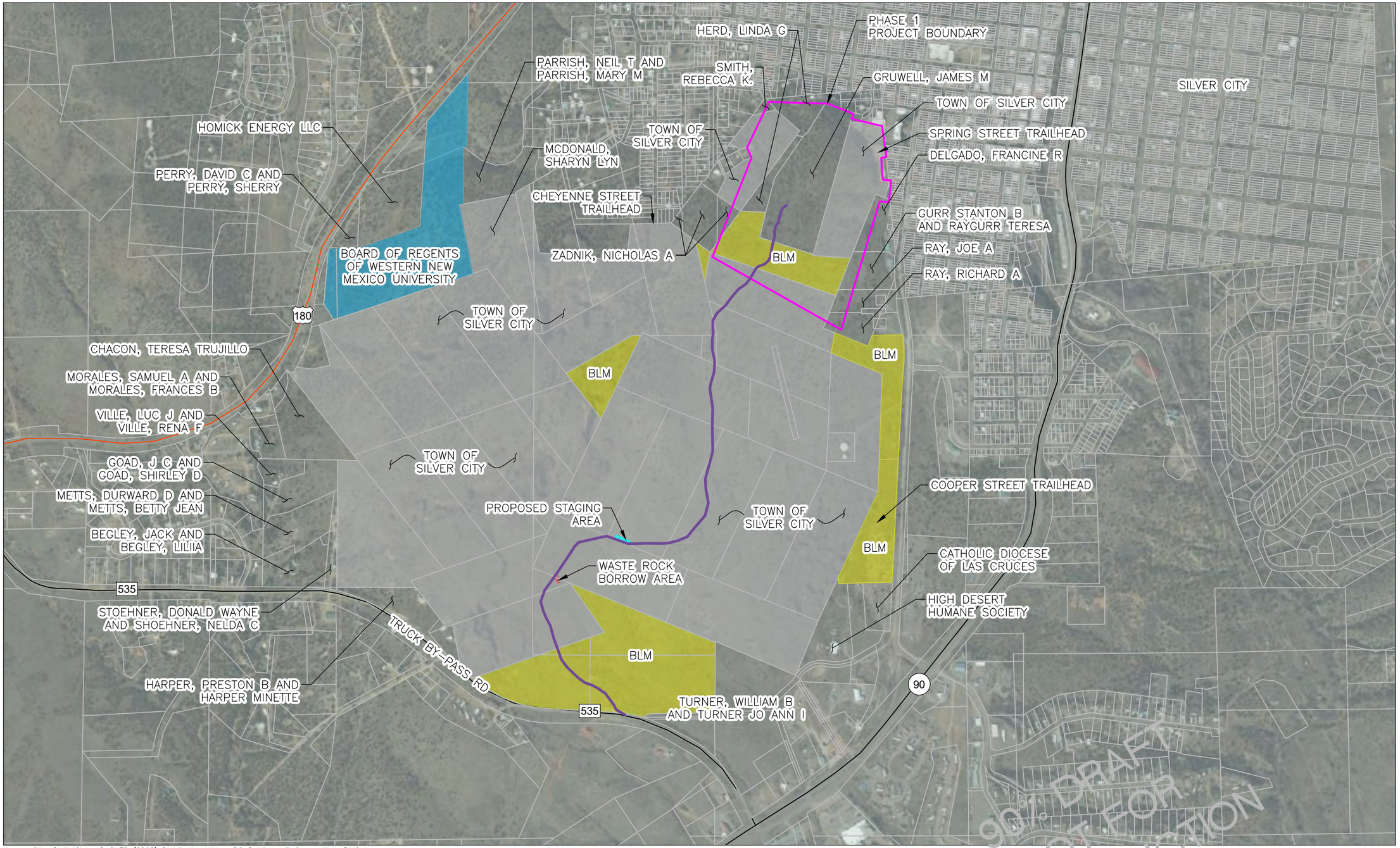

Image Cite: DigitalGlobe © CNES (2022) Distribution Airbus DS © Microsoft Corporation, BING Imagery

EXPLANATION

- BUREAU OF LAND MANAGEMENT (BLM)
- PROPERTY OF SILVER CITY
- BOARD OF REGENTS OF WESTERN NEW MEXICO UNIVERSITY

N

0 1,000'

REV.	DATE	DESCRIPTION	BY	CHK'D
0	05/02/2022	PHASE I 90% DESIGN SUBMITTAL	JD	TH

REVISIONS

DRAWN BY: JD
CHECKED BY: TH
DATE: 4/27/2022
SCALE: 1" = 1000'
FILE: 01A-BOSTON_SITEVICINITY

Trihydro
1252 Commerce Drive
Laramie, Wyoming 82070
www.trihydro.com
(P) 307.745.7474 (F) 307.745.7729

SITE VICINITY MAP

BOSTON HILL MINE SAFEGUARD PROJECT (PHASE I)
NEW MEXICO ABANDONED LAND MINE PROGRAM
SILVER CITY, NEW MEXICO

SHEET 2 2 OF 33

REV: 0

L:\NEW MEXICO - AML - DOCUMENTS\BOSTONHILL\CADD\PLANSET\01A-BOSTON_SITEVICINITY

L:\NEW MEXICO – AML – DOCUMENTS\BOSTONHILL\CADD\PLANSET\01A–BOSTON_SITEVICINITY

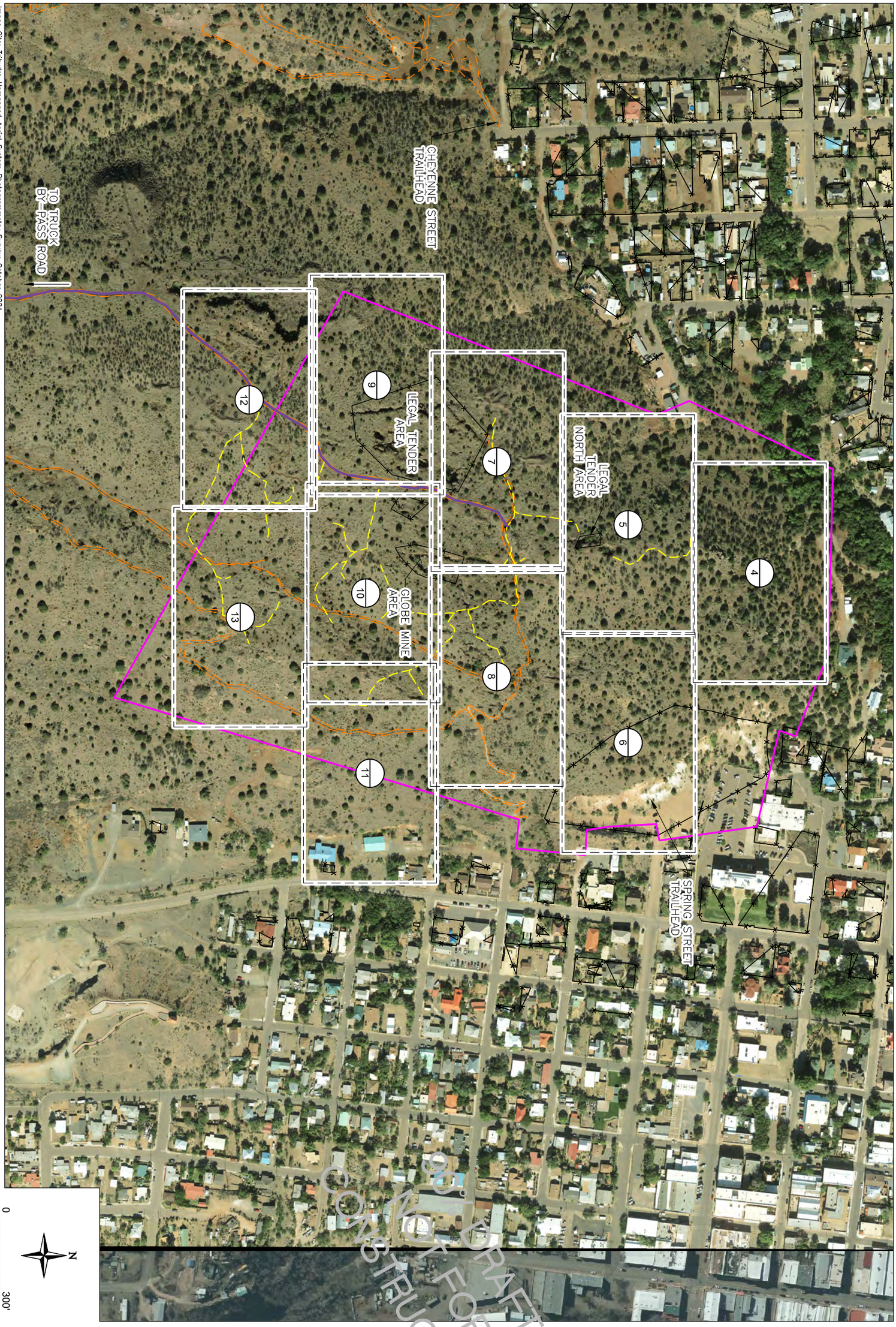

Image Cite: Trihydro Unmanned Aerial System Photogrammetry Survey; October 2021

SHEET 3 3 OF 33	**PHASE I PROJECT LOCATION AND PLAN VIEW INDEX**	Trihydro CORPORATION 1252 Commerce Drive Laramie, Wyoming 82070 www.trihydro.com (P) 307/745.7474 (F) 307/745.7729	DRAWN BY: JD CHECKED BY: TH DATE: 4/27/2022 SCALE: 1" = 300' FILE: 01A-BOSTON_SITEVICINITY	
REV: 0	**BOSTON HILL MINE SAFEGUARD PROJECT (PHASE I) NEW MEXICO ABANDONDED LAND MINE PROGRAM SILVER CITY, NEW MEXICO**			

REV.	DATE	DESCRIPTION	BY	CHK'D
0	05/02/2022	PHASE I 90% DESIGN SUBMITTAL	JD	TH

REVISIONS

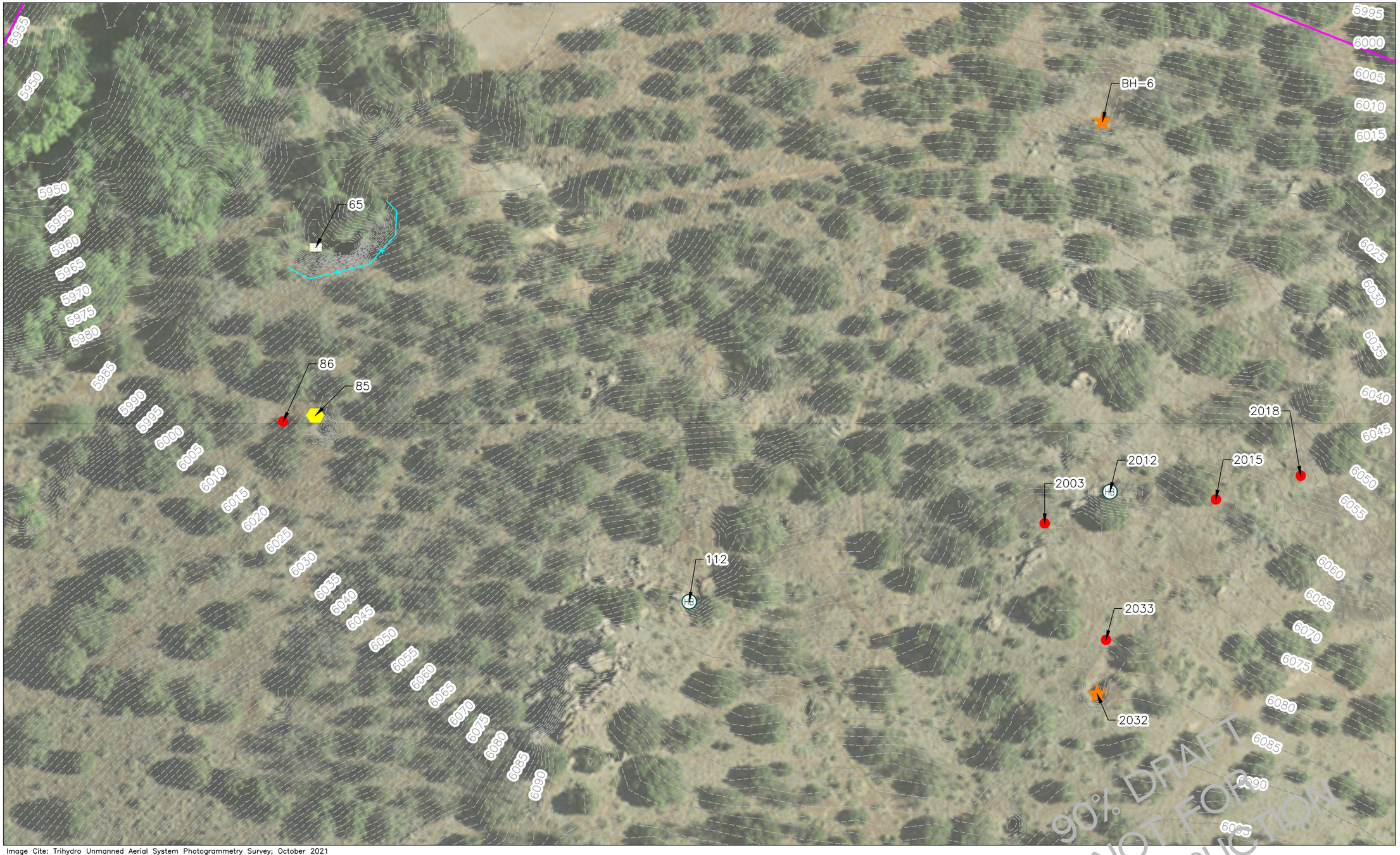

Image Cite: Trihydro Unmanned Aerial System Photogrammetry Survey; October 2021

EXPLANATION

- PUF AND WASTE ROCK VERTICAL SHAFT CLOSURE (1/24)
- PUF AND WASTE ROCK ADIT CLOSURE (2/22)
- WASTE ROCK BORROW LOCATION (1/17)
- METAL BARRIER FENCE INSTALLATION LOCATION (1/26)

N

0 50'

REV.	DATE	DESCRIPTION	BY	CHK'D
0	05/02/2022	PHASE I 90% DESIGN SUBMITTAL	JD	TH

REVISIONS

DRAWN BY: JD
CHECKED BY: TH
DATE: 4/27/2022
SCALE: 1" = 50'
FILE: 01A-BOSTON_PLANVIEW

Trihydro CORPORATION
1252 Commerce Drive
Laramie, Wyoming 82070
www.trihydro.com
(P) 307.745.7474 (F) 307.745.7729

BOSTON HILL SAFEGUARD FEATURES PLAN VIEW (1 OF 10)

BOSTON HILL MINE SAFEGUARD PROJECT (PHASE I)
NEW MEXICO ABANDONED LAND MINE PROGRAM
SILVER CITY, NEW MEXICO

SHEET 4
4 OF 33
REV: 0

L:\NEW MEXICO - AML - DOCUMENTS\BOSTONHILL\CADD\PLANSET\01A-BOSTON_PLANVIEW

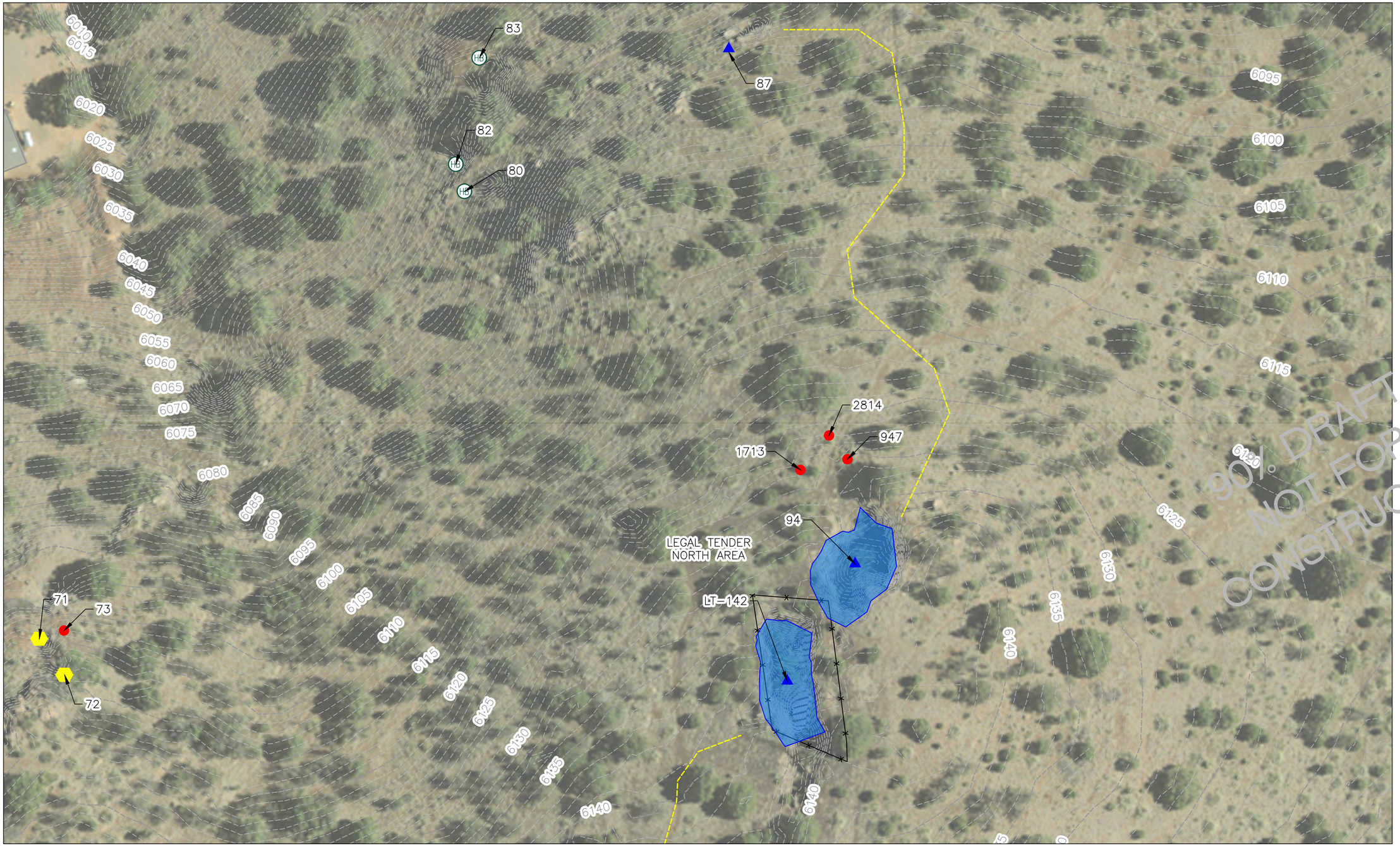

Image Cite: Trihydro Unmanned Aerial System Photogrammetry Survey; October 2021

EXPLANATION

- PUF AND WASTE ROCK VERTICAL SHAFT CLOSURE (1/24)
- HAND WASTE ROCK BACKFILL LOCATION (1/14) (2/14)
- MACHINE WASTE ROCK BACKFILL LOCATION (1/14) (2/14)
- WASTE ROCK BORROW LOCATION (1/17)

N

0 50'

REV.	DATE	DESCRIPTION	BY	CHK'D
0	05/02/2022	PHASE I 90% DESIGN SUBMITTAL	JD	TH

REVISIONS

DRAWN BY: JD
CHECKED BY: TH
DATE: 4/27/2022
SCALE: 1" = 50'
FILE: 01A-BOSTON_PLANVIEW

Trihydro
1252 Commerce Drive
Laramie, Wyoming 82070
www.trihydro.com
(P) 307.745.7474 (F) 307.745.7729

BOSTON HILL SAFEGUARD FEATURES PLAN VIEW (2 OF 10)

BOSTON HILL MINE SAFEGUARD PROJECT (PHASE I)
NEW MEXICO ABANDONDED LAND MINE PROGRAM
SILVER CITY, NEW MEXICO

SHEET 5
5 OF 33
REV: 0

L:\NEW MEXICO - AML - DOCUMENTS\BOSTONHILL\CADD\PLANSET\01A-BOSTON_PLANVIEW

Image Cite: Trihydro Unmanned Aerial System Photogrammetry Survey; October 2021

EXPLANATION

HB — HAND WASTE ROCK BACKFILL LOCATION (1/14) (2/14)

EXISTING FENCE REPAIR LOCATION (33)

N

0 50'

REV.	DATE	DESCRIPTION	BY	CHK'D
0	05/02/2022	PHASE I 90% DESIGN SUBMITTAL	JD	TH

REVISIONS

DRAWN BY: JD
CHECKED BY: TH
DATE: 4/27/2022
SCALE: 1" = 50'
FILE: 01A-BOSTON_PLANVIEW

Trihydro
1252 Commerce Drive
Laramie, Wyoming 82070
www.trihydro.com
(P) 307/745.7474 (F) 307/745.7729

BOSTON HILL SAFEGUARD FEATURES PLAN VIEW (3 OF 10)

BOSTON HILL MINE SAFEGUARD PROJECT (PHASE I)
NEW MEXICO ABANDONED LAND MINE PROGRAM
SILVER CITY, NEW MEXICO

SHEET **6**
6 OF 33

REV: **0**

L:\NEW MEXICO – AML – DOCUMENTS\BOSTONHILL\CADD\PLANSET\01A-BOSTON_PLANVIEW

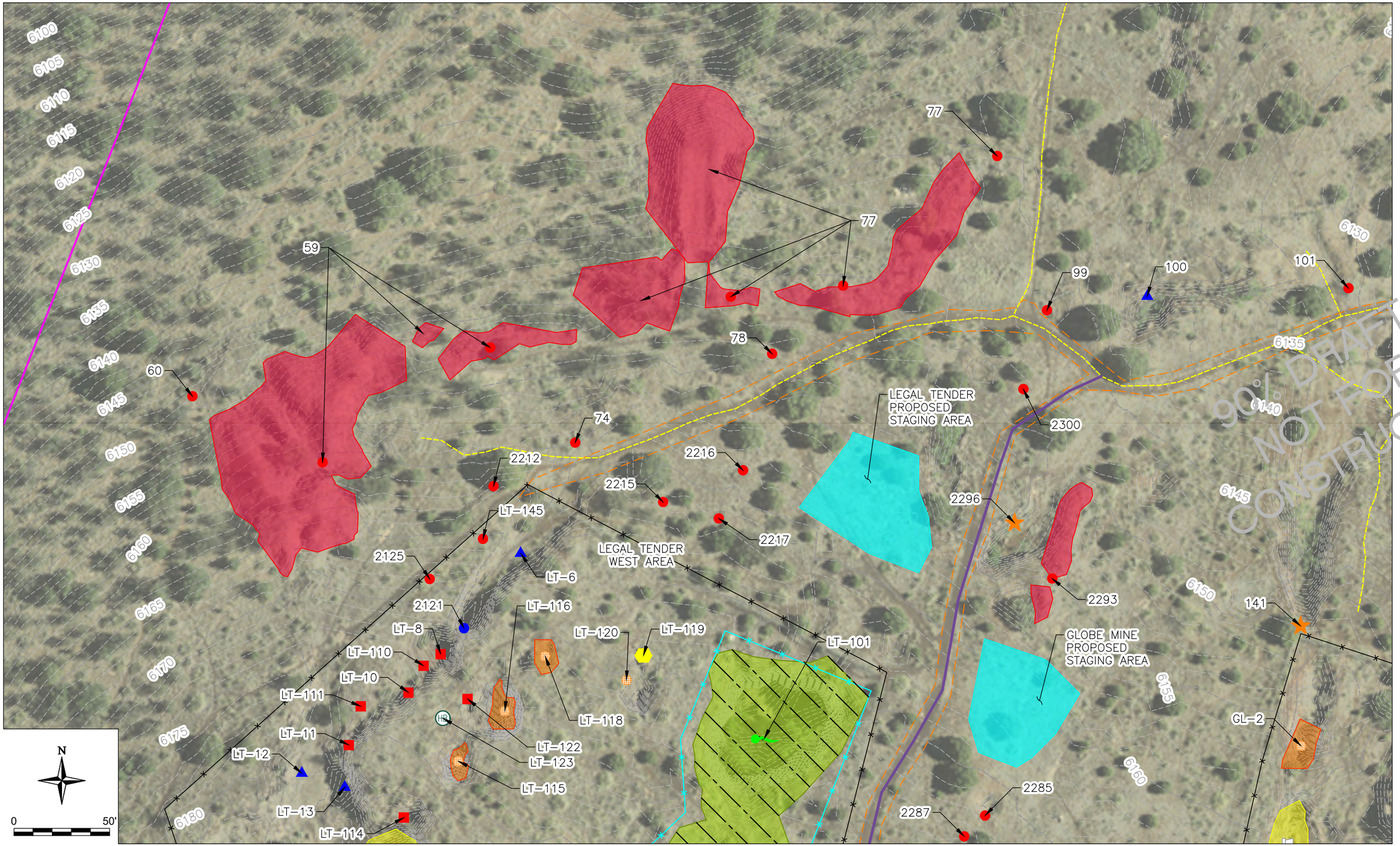

Image Cite: Trihydro Unmanned Aerial System Photogrammetry Survey; October 2021

EXPLANATION

- PUF, SACKRETE, AND WASTE ROCK ADIT CLOSURE (1/20)
- PUF AND WASTE ROCK ADIT CLOSURE (2/22)
- HAND WASTE ROCK BACKFILL LOCATION (1/14) (2/14)
- MACHINE WASTE ROCK BACKFILL LOCATION (1/14) (2/14)
- PUF AND WASTE ROCK VERTICAL SHAFT CLOSURE (1/24)
- WASTE ROCK BORROW LOCATION (1/17)
- METAL GRATE CLOSURE (1/27)
- EGRESS ADIT CLOSURE (1/30)

REV.	DATE	DESCRIPTION	BY	CHK'D
0	05/02/2022	PHASE I 90% DESIGN SUBMITTAL	JD	TH

REVISIONS

DRAWN BY: JD
CHECKED BY: TH
DATE: 4/27/2022
SCALE: 1" = 50'
FILE: 01A-BOSTON_PLANVIEW

Trihydro CORPORATION
1252 Commerce Drive
Laramie, Wyoming 82070
www.trihydro.com
(P) 307.745.7474 (F) 307.745.7729

BOSTON HILL SAFEGUARD FEATURES PLAN VIEW (4 OF 10)

BOSTON HILL MINE SAFEGUARD PROJECT (PHASE I)
NEW MEXICO ABANDONED LAND MINE PROGRAM
SILVER CITY, NEW MEXICO

SHEET 7 OF 33
REV: 0

L:\NEW MEXICO – AML – DOCUMENTS\BOSTONHILL\CADD\PLANSET\01A-BOSTON_PLANVIEW

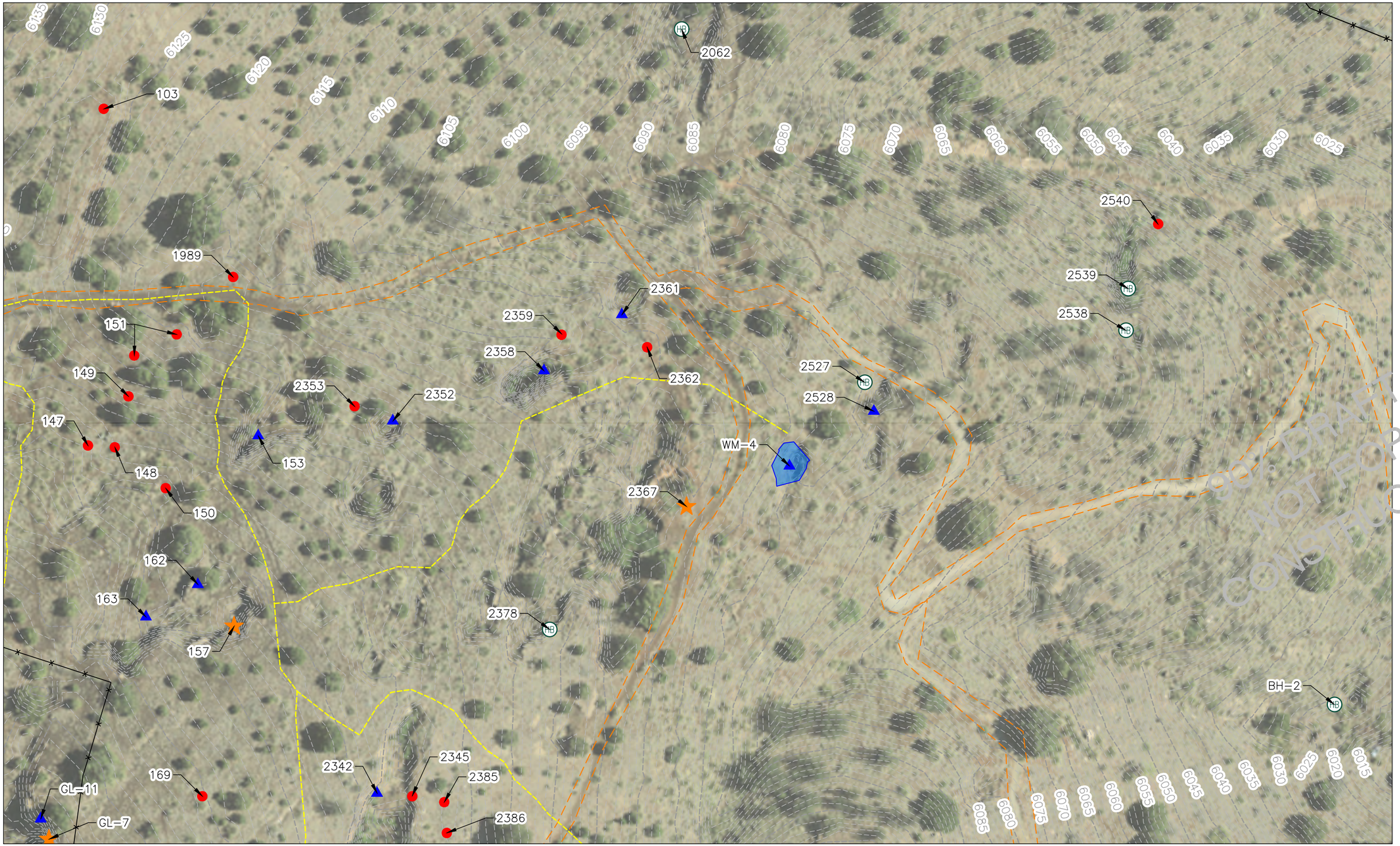

Image Cite: Trihydro Unmanned Aerial System Photogrammetry Survey; October 2021

EXPLANATION

- PUF AND WASTE ROCK ADIT CLOSURE (2/22)
- WASTE ROCK BORROW LOCATION (1/17)
- HAND WASTE ROCK BACKFILL LOCATION (1/14) (2/14)
- MACHINE WASTE ROCK BACKFILL LOCATION (1/14) (2/14)

N

0 50'

REV.	DATE	DESCRIPTION	BY	CHK'D
0	05/02/2022	PHASE I 90% DESIGN SUBMITTAL	JD	TH

REVISIONS

DRAWN BY: JD
CHECKED BY: TH
DATE: 4/27/2022
SCALE: 1" = 50'
FILE: 01A-BOSTON_PLANVIEW

Trihydro
1252 Commerce Drive
Laramie, Wyoming 82070
www.trihydro.com
(P) 307/745.7474 (F) 307/745.7729

BOSTON HILL SAFEGUARD FEATURES PLAN VIEW (5 OF 10)

BOSTON HILL MINE SAFEGUARD PROJECT (PHASE I)
NEW MEXICO ABANDONDED LAND MINE PROGRAM
SILVER CITY, NEW MEXICO

SHEET 8 8 OF 33

REV: 0

L:\NEW MEXICO - AML - DOCUMENTS\BOSTONHILL\CADD\PLANSET\01A-BOSTON_PLANVIEW

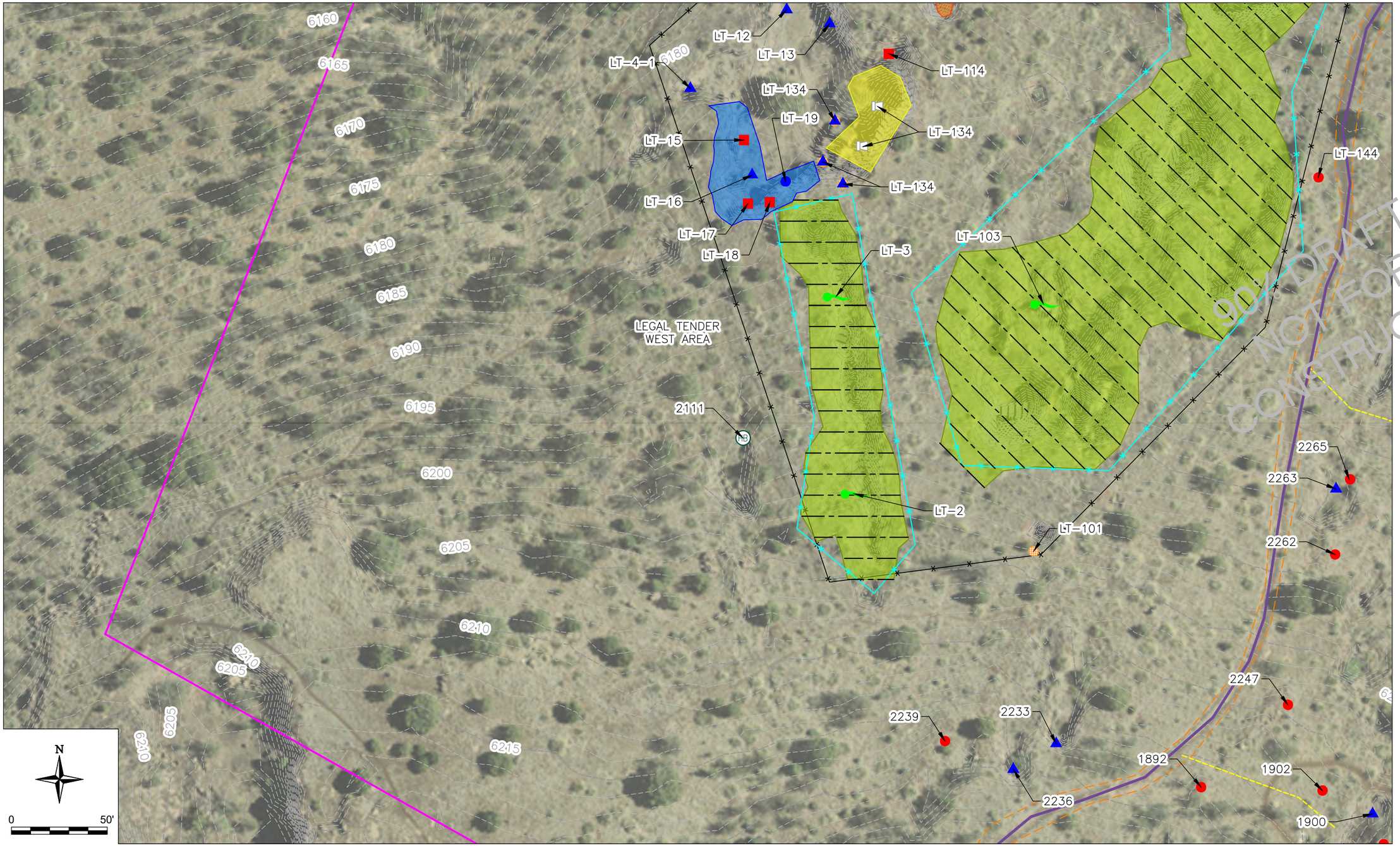

Image Cite: Trihydro Unmanned Aerial System Photogrammetry Survey; October 2021

EXPLANATION

- PUF, SACKRETE, AND WASTE ROCK ADIT CLOSURE (1/20)
- ADIT STOPE METAL GRATE CLOSURE (1/29)
- HAND WASTE ROCK BACKFILL LOCATION (1/14) (2/14)
- MACHINE WASTE ROCK BACKFILL LOCATION (1/14) (2/14)
- WASTE ROCK BORROW LOCATION (1/17)
- METAL GRATE CLOSURE (1/27)
- CABLE MESH CLOSURE (1/25)
- EGRESS ADIT CLOSURE (1/30)

REV.	DATE	DESCRIPTION	BY	CHK'D
0	05/03/2022	PHASE I 90% DESIGN SUBMITTAL	JD	TH

REVISIONS

DRAWN BY: JD
CHECKED BY: TH
DATE: 4/27/2022
SCALE: 1" = 50'
FILE: 01A-BOSTON_PLANVIEW

Trihydro CORPORATION
1252 Commerce Drive
Laramie, Wyoming 82070
www.trihydro.com
(P) 307.745.7474 (F) 307.745.7729

BOSTON HILL SAFEGUARD FEATURES PLAN VIEW (6 OF 10)

BOSTON HILL MINE SAFEGUARD PROJECT (PHASE I)
NEW MEXICO ABANDONED LAND MINE PROGRAM
SILVER CITY, NEW MEXICO

SHEET 9 OF 33

REV: 0

L:\NEW MEXICO - AML - DOCUMENTS\BOSTONHILL\CADD\PLANSET\01A-BOSTON_PLANVIEW

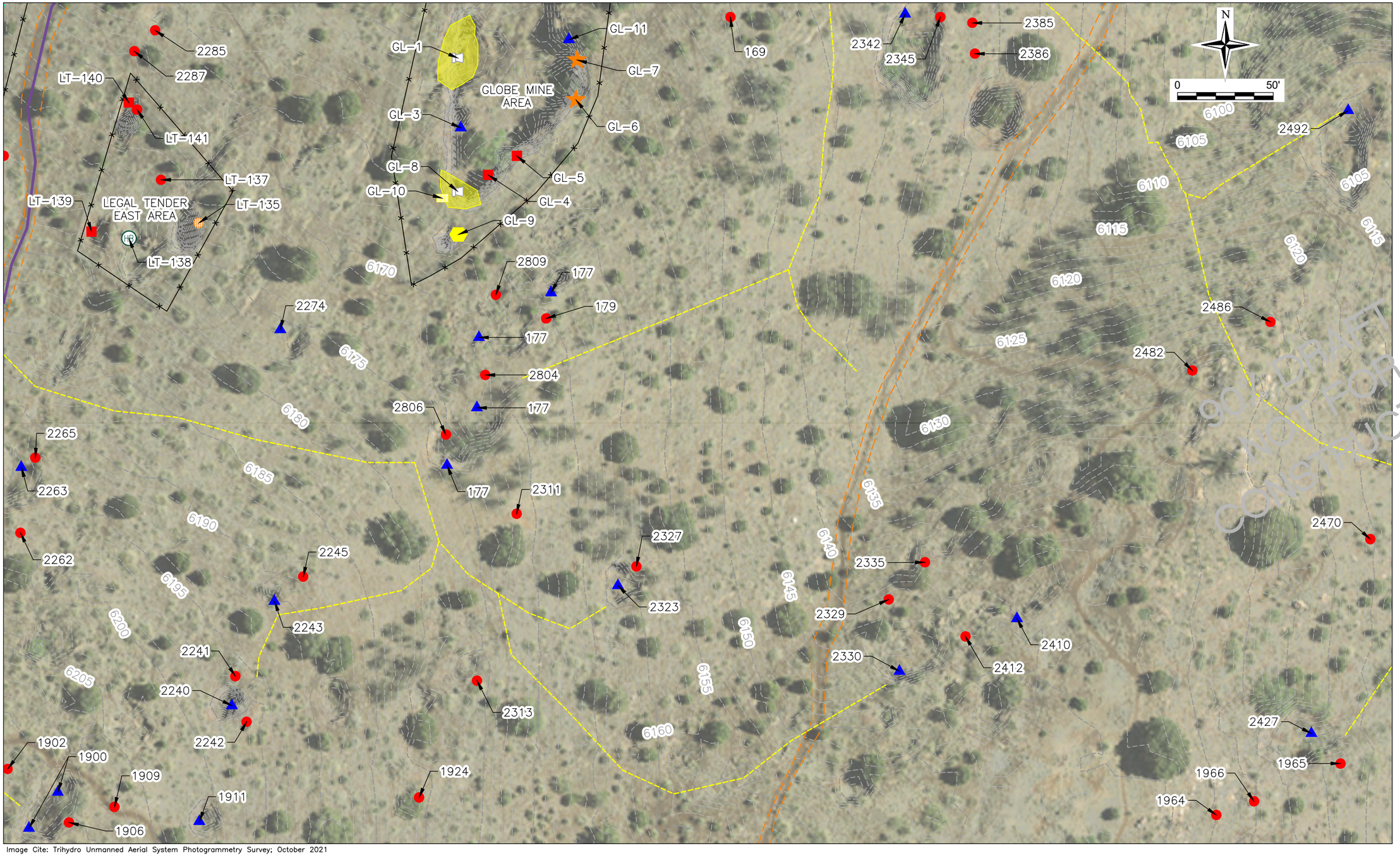

Image Cite: Trihydro Unmanned Aerial System Photogrammetry Survey; October 2021

90% DRAFT NOT FOR CONSTRUCTION

EXPLANATION

- PUF, SACKRETE, AND WASTE ROCK ADIT CLOSURE (1/20)
- PUF AND WASTE ROCK ADIT CLOSURE (2/22)
- PUF AND WASTE ROCK VERTICAL SHAFT CLOSURE (1/24)
- HAND WASTE ROCK BACKFILL LOCATION (1/14) (2/14)
- MACHINE WASTE ROCK BACKFILL LOCATION (1/14) (2/14)
- METAL BARRIER FENCE INSTALLATION LOCATION (1/26)
- WASTE ROCK BORROW LOCATION (1/17)
- METAL GRATE CLOSURE (1/27)
- ADIT STOPE METAL GRATE CLOSURE (1/29)

REV.	DATE	DESCRIPTION	BY	CHK'D
0	05/02/2022	PHASE I 90% DESIGN SUBMITTAL	JD	TH

REVISIONS

DRAWN BY: JD
CHECKED BY: TH
DATE: 4/27/2022
SCALE: 1" = 50'
FILE: 01A-BOSTON_PLANVIEW

Trihydro
1252 Commerce Drive
Laramie, Wyoming 82070
www.trihydro.com
(P) 307/745.7474 (F) 307/745.7729

BOSTON HILL SAFEGUARD FEATURES PLAN VIEW (7 OF 10)

BOSTON HILL MINE SAFEGUARD PROJECT (PHASE I)
NEW MEXICO ABANDONED LAND MINE PROGRAM
SILVER CITY, NEW MEXICO

SHEET 10
10 OF 33
REV: 0

L:\NEW MEXICO - AML - DOCUMENTS\BOSTONHILL\CADD\PLANSET\01A-BOSTON_PLANVIEW

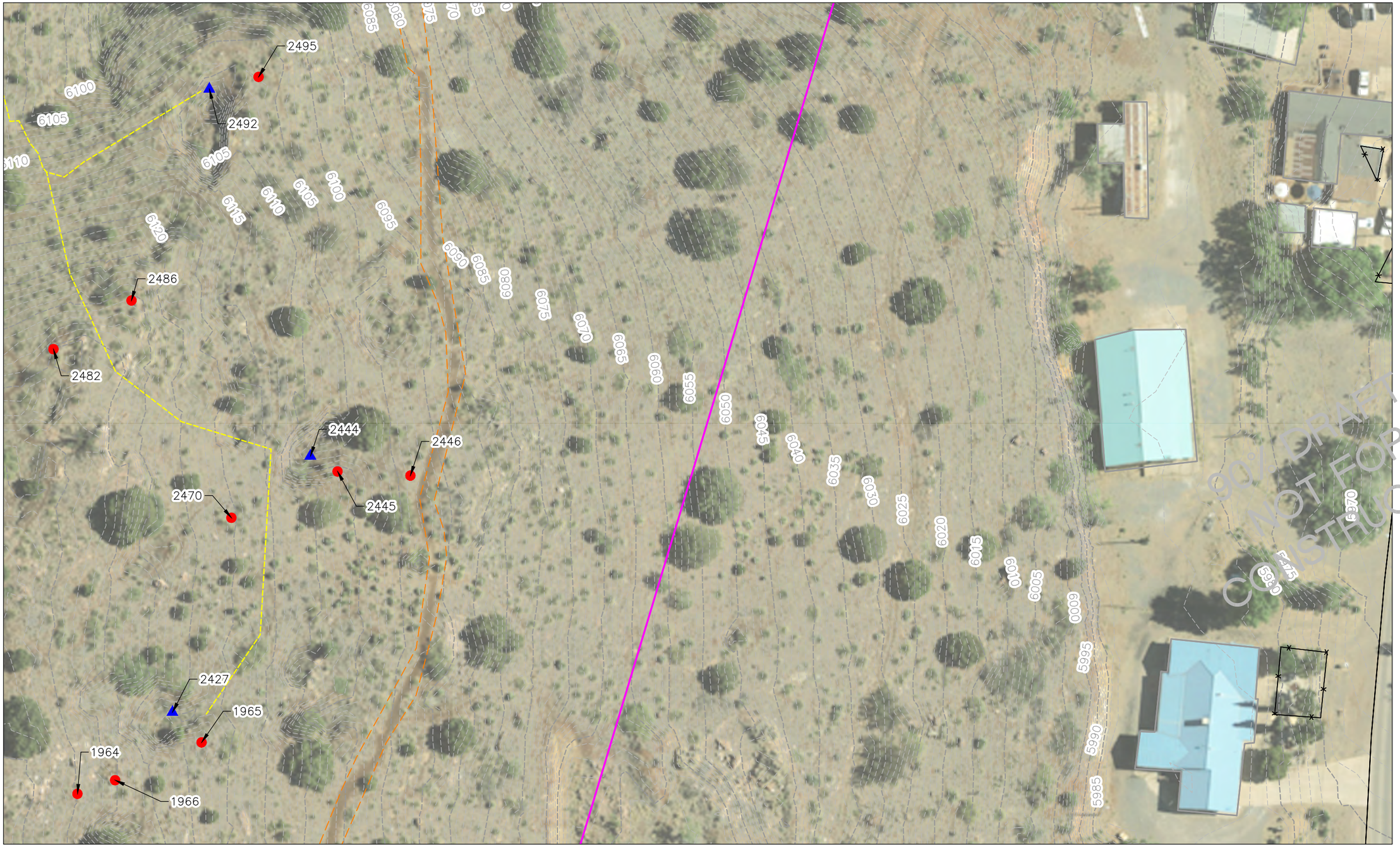

Image Cite: Trihydro Unmanned Aerial System Photogrammetry Survey; October 2021

EXPLANATION

▲ MACHINE WASTE ROCK BACKFILL LOCATION (1/14) (2/14)

● WASTE ROCK BORROW LOCATION (1/17)

N

0 50'

REV.	DATE	DESCRIPTION	BY	CHK'D
0	05/02/2022	PHASE I 90% DESIGN SUBMITTAL	JD	TH

REVISIONS

DRAWN BY: JD
CHECKED BY: TH
DATE: 4/27/2022
SCALE: 1" = 50'
FILE: 01A-BOSTON_PLANVIEW

Trihydro
1252 Commerce Drive
Laramie, Wyoming 82070
www.trihydro.com
(P) 307.745.7474 (F) 307.745.7729

BOSTON HILL SAFEGUARD FEATURES PLAN VIEW (8 OF 10)

BOSTON HILL MINE SAFEGUARD PROJECT (PHASE I)
NEW MEXICO ABANDONED LAND MINE PROGRAM
SILVER CITY, NEW MEXICO

SHEET **11** 11 OF 33

REV: **0**

L:\NEW MEXICO – AML – DOCUMENTS\BOSTONHILL\CADD\PLANSET\01A-BOSTON_PLANVIEW

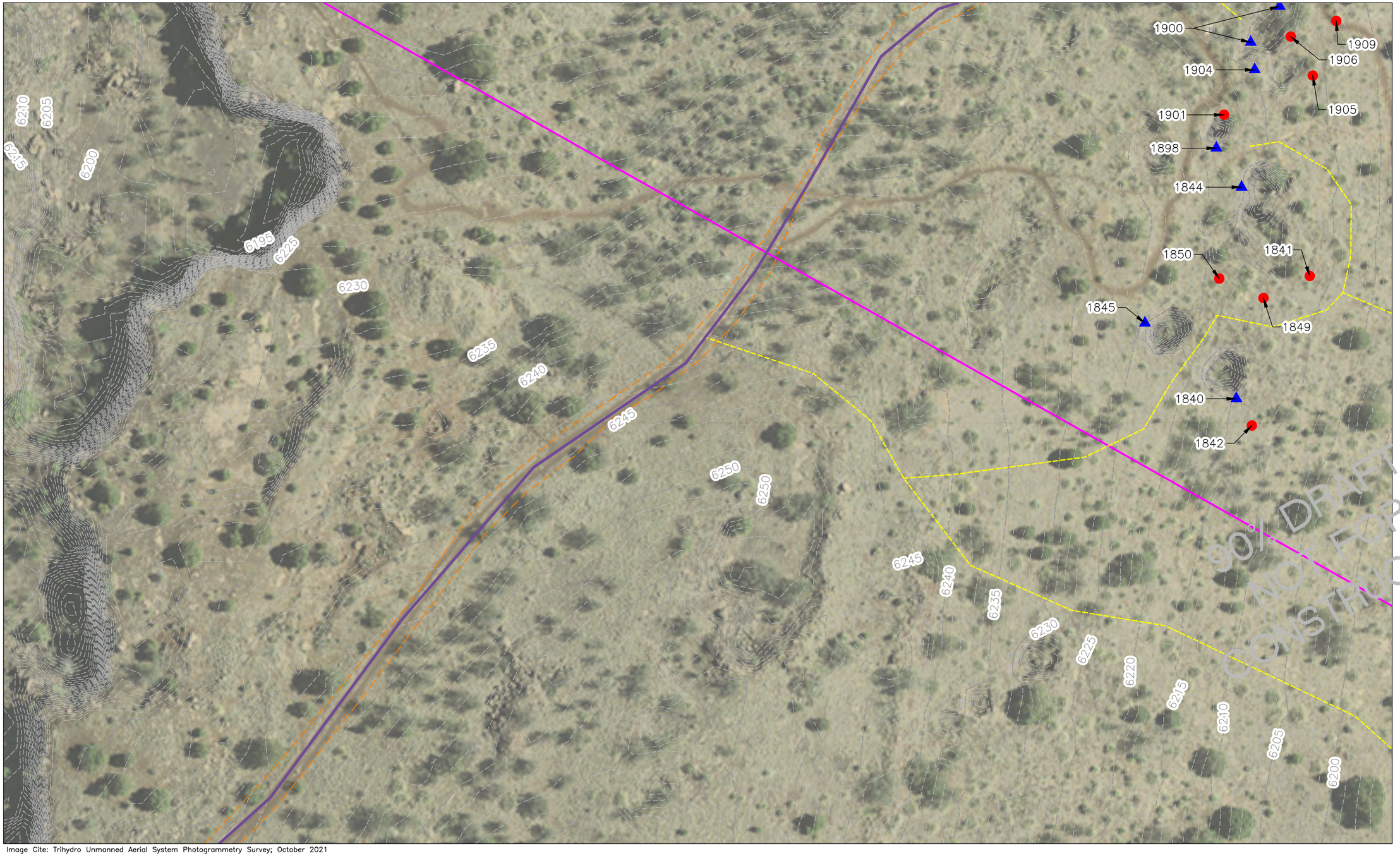

Image Cite: Trihydro Unmanned Aerial System Photogrammetry Survey; October 2021

EXPLANATION

▲ MACHINE WASTE ROCK BACKFILL LOCATION (1/14) (2/14)

● WASTE ROCK BORROW LOCATION (1/17)

N

0 50'

REV.	DATE	DESCRIPTION	BY	CHK'D
0	05/02/2022	PHASE I 90% DESIGN SUBMITTAL	JD	TH

REVISIONS

DRAWN BY: JD
CHECKED BY: TH
DATE: 4/27/2022
SCALE: 1" = 50'
FILE: 01A-BOSTON_PLANVIEW

Trihydro
1252 Commerce Drive
Laramie, Wyoming 82070
www.trihydro.com
(P) 307.745.7474 (F) 307.745.7729

BOSTON HILL SAFEGUARD FEATURES PLAN VIEW (9 OF 10)

BOSTON HILL MINE SAFEGUARD PROJECT (PHASE I)
NEW MEXICO ABANDONED LAND MINE PROGRAM
SILVER CITY, NEW MEXICO

SHEET 12
12 OF 33
REV: 0

L:\NEW MEXICO – AML – DOCUMENTS\BOSTONHILL\CADD\PLANSET\01A-BOSTON_PLANVIEW

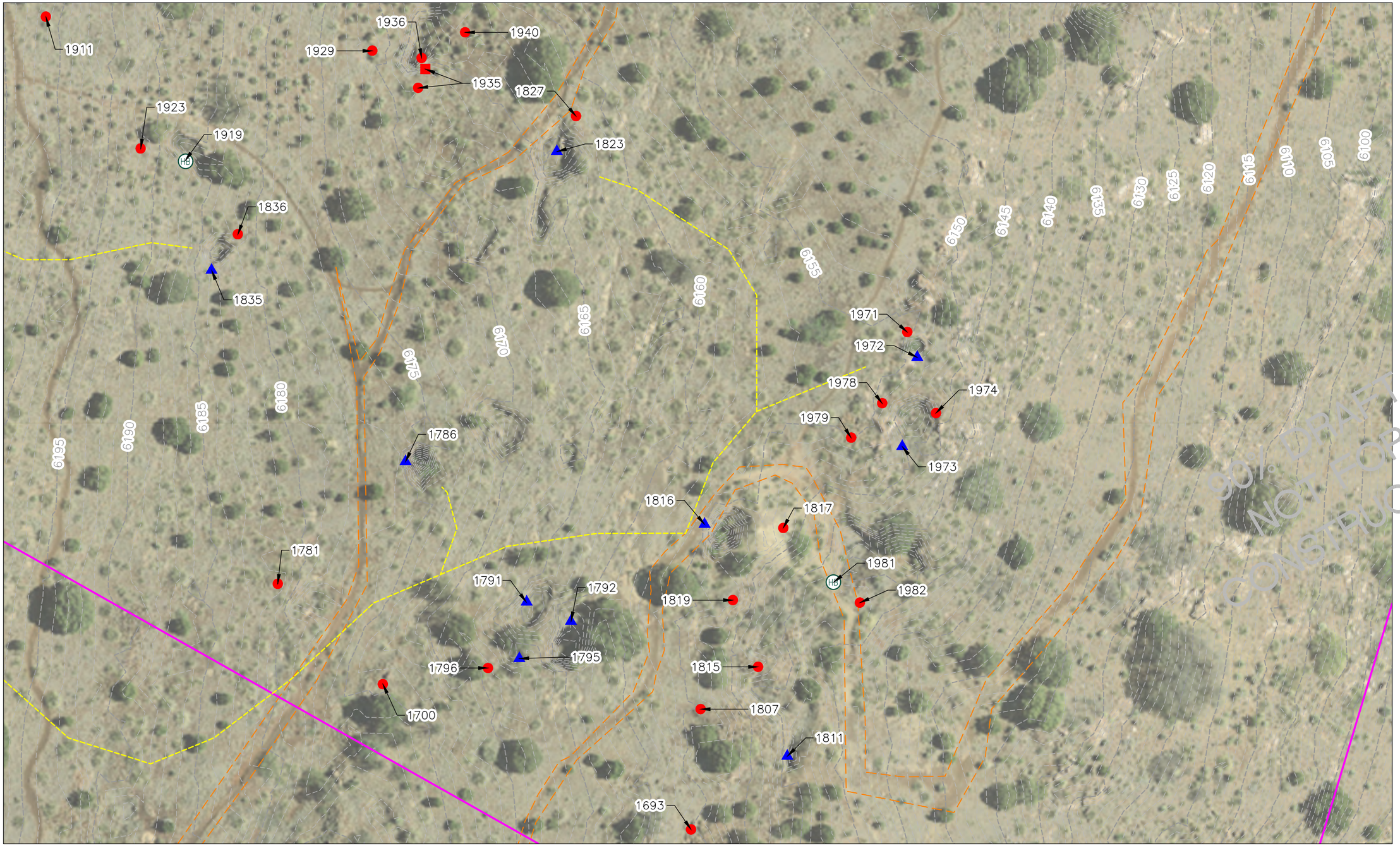

Image Cite: Trihydro Unmanned Aerial System Photogrammetry Survey; October 2021

EXPLANATION

- HB — HAND WASTE ROCK BACKFILL LOCATION (1/14) (2/14)
- MACHINE WASTE ROCK BACKFILL LOCATION (1/14) (2/14)
- PUF, SACKRETE, AND WASTE ROCK ADIT CLOSURE (1/20)
- WASTE ROCK BORROW LOCATION (1/17)

N

0 50'

REV.	DATE	DESCRIPTION	BY	CHK'D
0	05/02/2022	PHASE I 90% DESIGN SUBMITTAL	JD	TH

REVISIONS

DRAWN BY: JD
CHECKED BY: TH
DATE: 4/27/2022
SCALE: 1" = 50'
FILE: 01A-BOSTON_PLANVIEW

Trihydro
1252 Commerce Drive
Laramie, Wyoming 82070
www.trihydro.com
(P) 307/745.7474 (F) 307/745.7729

BOSTON HILL SAFEGUARD FEATURES PLAN VIEW (10 OF 10)

BOSTON HILL MINE SAFEGUARD PROJECT (PHASE I)
NEW MEXICO ABANDONDED LAND MINE PROGRAM
SILVER CITY, NEW MEXICO

SHEET 13
13 OF 33
REV.: 0

L:\NEW MEXICO - AML - DOCUMENTS\BOSTONHILL\CADD\PLANSET\01A-BOSTON_PLANVIEW

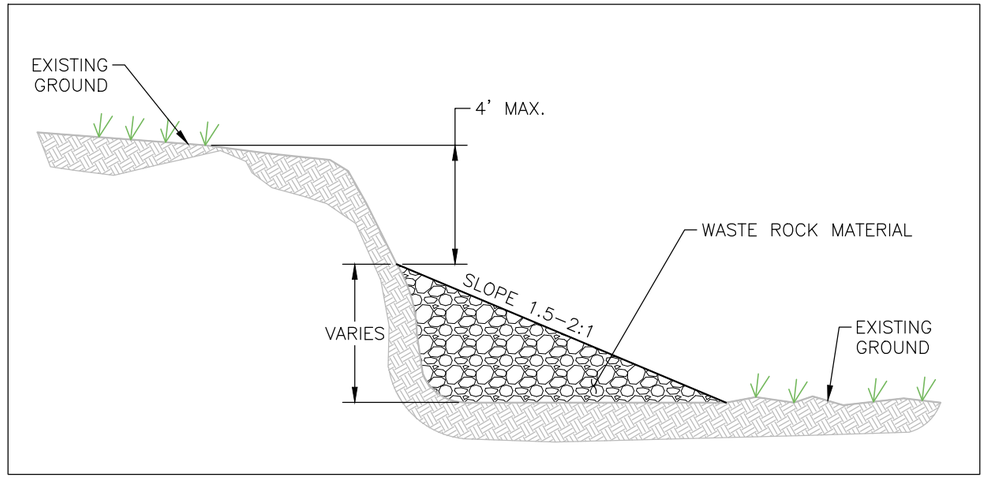

1 WASTE ROCK WALL BACKFILL
SCALE: NONE

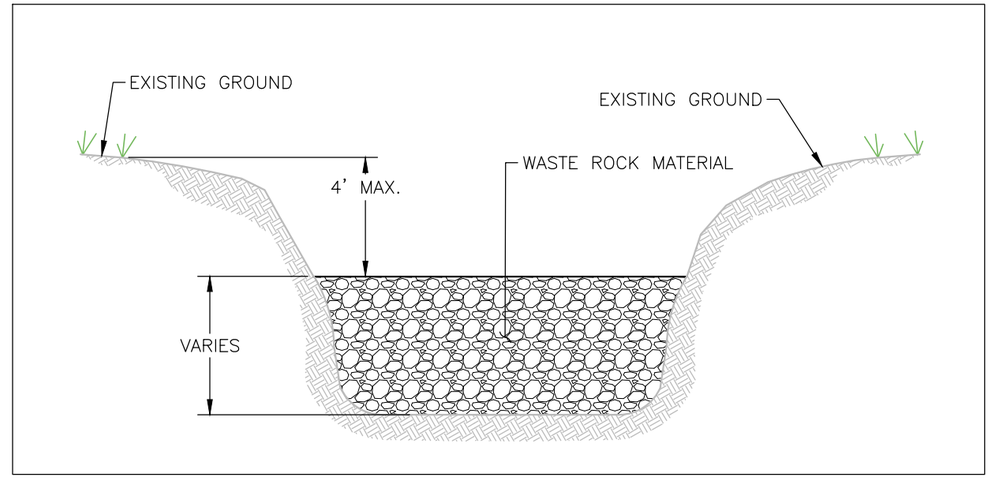

2 WASTE ROCK PIT BACKFILL
SCALE: NONE

NOTES:

1. SEE SHEETS 15-16 FOR TABLES DETAILING INFORMATION ABOUT PROPOSED MACHINE BACKFILL LOCATIONS. SEE THIS SHEET FOR A TABLE DETAILING INFORMATION ABOUT PROPOSED HAND BACKFILL LOCATIONS. BOTH SETS OF TABLES INCLUDE BACKFILL AREA, DEPTH, VOLUME AND OTHER SPECIAL CONSIDERATIONS.
2. SOME IMPORT BORROW MATERIAL MAY REQUIRE TO BE SOURCED OUTSIDE THE PHASE I AREA.

HAND WASTE ROCK BACKFILL SUMMARY

FEATURE		#		FT		SF	FT	CY	
TRIHYDRO ID	OKUN ID	SHEET	BACKFILL TYPE (WALL/PIT)	WIDTH	LENGTH	AREA	AVERAGE BACKFILL DEPTH	VOLUME	ADDITIONAL NOTES
BH-2			PIT	5	5	25	2	1	BACKFILL WITH ADJACENT WASTE ROCK AND SPOIL MATERIAL
LT-123	2150	7	PIT	4	4	16	2	1	INVESTIGATE DEPRESSION FOR SUBSIDENCE; BORROW MATERIAL FROM ADJACENT WASTE ROCK AND SPOIL MATERIAL
LT-138		10	WALL			200	1	7	BACKFILL MULTIPLE SMALL WALL/DEPRESSION AREAS; BORROW MATERIAL FROM LT-137 WASTE ROCK PILE.
	80	5	WALL	10	6	60	4	4.5	BACKFILL WALLS TO WITHIN 4FT OF TOP OF WALL; BORROW MATERIAL FROM ADJACENT SOURCES
	82	5	WALL	6	6	36	3	2	BACKFILL WALL TO WITHIN 4FT OF TOP OF WALL; BORROW MATERIAL FROM ADJACENT SOURCES
	83	5	WALL	12	6	72	5	6	BACKFILL WALL TO WITHIN 4FT OF TOP OF WALL; BORROW MATERIAL FROM ADJACENT SOURCES
	112	4	PIT	5	4	20	2	1.5	BACKFILL PIT TO WITHIN 4FT OF TOP OF PIT; BORROW MATERIAL FROM ADJACENT SOURCES
	1919	13	WALL	9	8	72	2	3	BACKFILL WALL TO WITHIN 4FT OF TOP OF WALL; BORROW MATERIAL FROM ADJACENT 1923 SOURCE
	1981	13	PIT	16	5	80	1	2	BACKFILL PIT TO WITHIN 4FT OF TOP OF PIT; BORROW MATERIAL FROM ADJACENT OPEN CUT AREA AND 1982 WASTE ROCK PILE
	2012	4	PIT	4	4	16	4	2.5	BACKFILL SMALL ADIT; BORROW MATERIAL FROM ADJACENT SOURCES
	2062	8	WALL			160		15	BACKFILL WALL TO WITHIN 4FT OF TOP OF WALL; BORROW MATERIAL FROM ADJACENT OPEN CUT AREA
	2071	6	PIT	5	5	25	2	2	BACKFILL PIT TO WITHIN 4FT OF TOP OF PIT; BORROW MATERIAL FROM ADJACENT SOURCES
	2111	9	WALL	20	2	40	2	2	BACKFILL WALL TO WITHIN 4FT OF TOP OF WALL; BORROW MATERIAL FROM ADJACENT OPEN CUT AREA
	2378	8	WALL	10	10	100	2	3.5	BACKFILL WALL TO WITHIN 4FT OF TOP OF WALL; BORROW MATERIAL FROM ADJACENT OPEN CUT AREA
	2527	8	PIT	5	6	30	2	2	BACKFILL PIT TO WITHIN 4FT OF TOP OF PIT; BORROW MATERIAL FROM ADJACENT OPEN CUT AREA
	2538	8	PIT	5	8	40	2.5	3.5	BACKFILL PIT TO WITHIN 4FT OF TOP OF PIT; BORROW MATERIAL FROM ADJACENT SOURCES
	2539	8	PIT	8	40	320	8	30	BACKFILL TRENCH WITH ADJACENT WASTE ROCK PILE TO THE EAST; NO EQUIPMENT ACCESS

REV.	DATE	DESCRIPTION	BY	CHK'D
0	05/02/2022	PHASE I 90% DESIGN SUBMITTAL	JD	TH

REVISIONS

DRAWN BY: JD
CHECKED BY: TH
DATE: 4/27/2022
SCALE: NONE
FILE: 01A-BOSTON_DETAILS

Trihydro
1252 Commerce Drive
Laramie, Wyoming 82070
www.trihydro.com
(P) 307/745.7474 (F) 307/745.7729

MACHINE AND HAND WASTE ROCK BACKFILL PLACEMENT DETAILS

BOSTON HILL MINE SAFEGUARD PROJECT (PHASE I)
NEW MEXICO ABANDONED LAND MINE PROGRAM
SILVER CITY, NEW MEXICO

SHEET **14**
14 OF 33
REV: 0

MACHINE WASTE ROCK BACKFILL SUMMARY

FEATURE		#		FT		SF	FT	CY	
TRIHYDRO ID	OKUN ID	SHEET	BACKFILL TYPE (WALL/PIT)	WIDTH	LENGTH	AREA	AVERAGE BACKFILL DEPTH	VOLUME	ADDITIONAL NOTES
GL-3	2802	10	PIT	6	12	72	4	11	PROSPECT PIT BACKFILL; BACKFILL TO WITHIN 4FT OF TOP OF PIT; BORROW MATERIAL FROM GLOBE MINE PIT AREA AND GENERAL BORROW SOURCES
GL-11	165	8	WALL			2000	12	889	BACKFILL 115FT LENGTH OF HIGHWALL ON EAST SIDE OF GLOBE MINE PIT AREA; BACKFILL TO WITHIN 4FT OF TOP OF HIGHWALL; BORROW MATERIAL FROM 2817 WRP, GLOBE MINE OPEN PIT AREA, AND GENERAL BORROW SOURCES
LT-4-1	2134	9	PIT	5	5	25	2	2	BACKFILL PROSPECT PIT TO WITHIN 4FT OF TOP OF PIT; BORROW MATERIAL FROM LEGAL TENDER PIT AREA OR GENERAL BORROW SOURCES
LT-6	2121	7	WALL			550	3	61	BACKFILL INGRESS/TRENCH TO LEGAL TENDER TO WITHIN 4FT OF TOP OF TRENCH; DO NOT BACKFILL TRENCH TO A POINT THAT EGRESS CLOSURE WILL NOT FUNCTION; BORROW MATERIAL FROM WASTE ROCK PILES NORTH OF LEGAL TENDER AND FROM GENERAL BORROW SOURCES
LT-12	2134	7	WALL			300	4	30	BACKFILL 8FT WALL SECTION IN LEGAL TENDER PIT AREA; BACKFILL TO WITHIN 4FT OF TOP OF WALL; BORROW MATERIAL FROM LEGAL TENDER PIT AREA, LARGE WASTE ROCK PILES NORTH OF LEGAL TENDER, AND GENERAL BORROW SOURCES
LT-13	2134	7	WALL			200	10	49	BACKFILL 10FT WALL SECTION IN LEGAL TENDER PIT AREA; BACKFILL TO WITHIN 4FT OF TOP OF WALL; BORROW MATERIAL FROM LEGAL TENDER PIT AREA, LARGE WASTE ROCK PILES NORTH OF LEGAL TENDER, AND GENERAL BORROW SOURCES
LT-16	2134	9	WALL	25	12	300	6	66	BACKFILL OPEN CUT AND OVERHANG IN LEGAL TENDER PIT AREA; BACKFILL TO WITHIN 4FT OF TOP OF WALL; BORROW MATERIAL FROM LEGAL TENDER PIT AREA AND LARGE WASTE ROCK PILES NORTH AND WEST OF LEGAL TENDER
LT-113	2140		WALL			1300	10	481	BACKFILL 110FT LENGTH OF HIGHWALL IN LEGAL TENDER PIT AREA; BACKFILL TO WITHIN 4FT OF TOP OF HIGHWALL; BORROW MATERIAL FROM LEGAL TENDER PIT AREA, LARGE WASTE ROCK PILES NORTH OF LEGAL TENDER, AND GENERAL BORROW SOURCES
LT-134	2146	9	WALL	6	8	48	3	5	ALTERNATE RECLAMATION CLOSURE FOR LT-134 GRATE CLOSURE ADDITIONAL ENTRACES - PLACE WASTE ROCK OVER VOIDS IN LARGE BOULDERS THAT AREN'T COVERED BY LT-134 METAL GRATE CLOSURE AREA TO CLOSE ACCESS
LT-134	2146	9	WALL	6	8	48	3	5	ALTERNATE RECLAMATION CLOSURE FOR LT-134 GRATE CLOSURE ADDITIONAL ENTRACES - PLACE WASTE ROCK OVER VOIDS IN LARGE BOULDERS THAT AREN'T COVERED BY LT-134 METAL GRATE CLOSURE AREA TO CLOSE ACCESS
LT-134	2146	9	WALL	6	8	48	3	5	ALTERNATE RECLAMATION CLOSURE FOR LT-134 GRATE CLOSURE ADDITIONAL ENTRACES - PLACE WASTE ROCK OVER VOIDS IN LARGE BOULDERS THAT AREN'T COVERED BY LT-134 METAL GRATE CLOSURE AREA TO CLOSE ACCESS
LT-142	97	5	PIT			2400	28	2489	BACKFILL LARGE OPEN CUT AREA NORTH OF LEGAL TENDER; BACKFILL TO WITHIN 4FT OF TOP OF PIT; BORROW MATERIAL FROM LARGE WASTE ROCK PILES TO THE SOUTH AND WEST OR USE OFF PHASE I BORROW; REMOVE CHAIN LINK FENCE WHEN EARTH WORK IS COMPLETED
WM-4		8	WALL			150	3	10	BACKFILL WALL TO WITHIN 4FT OF TOP OF WALL; BORROW MATERIAL FROM ADJACENT WASTE ROCK SOURCE TO THE SOUTH
	87	5	PIT	8	4	32	9	11	BACKFILL PROSPECT PIT TO WITHIN 4FT OF TOP OF PIT; BORROW MATERIAL FROM ADJACENT WASTE ROCK PILES OR GENERAL BORROW SOURCES
	94	5	WALL			2400	15	650	BACKFILL OPEN CUT AREA HIGHWALL TO WITHIN 4FT OF TOP OF HIGHWALL; ACCESS FROM LT-142 AREA; BORROW MATERIAL FROM LARGE WASTE ROCK PILES SOUTH AND WEST OF LOCATION AND FROM GENERAL BORROW SOURCES.
	100	7	PIT	6	35	210	4	31	BACKFILL OPEN CUT AREA WALLS TO WITHIN 4FT OF TOP OF WALL; BORROW MATERIAL FROM ADJACENT WASTE ROCK SOURCES
	153	8	PIT	7	14	98	4	14	REMOVE TRASH AND BACKFILL OPEN TRENCH AREA TO WITHIN 4FT OF TOP OF TRENCH; BORROW MATERIAL FROM ADJACENT WASTE ROCK SOURCES 147-151 AND FROM GENERAL BORROW SOURCES
	162	8	PIT	9	18	162	2	6	BACKFILL PROSPOECT AREA TO WITHIN 4FT OF TOP OF WALLS; BORROW MATERIAL FROM SOURCES WITHIN PIT AREA AND FROM ADJACENT WASTE ROCK SOURCES
	163	8	WALL	13	6	78	4	6	BACKFILL OPEN CUT WALL TO WITHIN 4FT OF TOP OF WALL; BORROW MATERIAL FROM SOURCES WITHIN OPEN CUT AREA AND FROM ADJACENT WASTE ROCK SOURCES
	177	10	PIT	9	10	90	2	7	BACKFILL OPEN CUT AREA TO WITHIN 4FT OF TOP OF PIT; BORROW MATERIAL FROM SOURCES WITHIN 177 OPEN CUT AREA AND FROM ADJACENT WASTE ROCK SOURCES; MULTIPLE DISTINCT LOCATIONS WITHIN 177 OPEN CUT AREA
	177	10	WALL	12	12	144	6	16	BACKFILL OPEN CUT AREA WALL TO WITHIN 4FT OF TOP OF WALL; BORROW MATERIAL FROM SOURCES WITHIN 177 OPEN CUT AREA AND FROM ADJACENT WASTE ROCK SOURCES; MULTIPLE DISTINCT LOCATIONS WITHIN 177 OPEN CUT AREA
	177	10	PIT	9	12	108	3	12	BACKFILL OPEN CUT AREA TO WITHIN 4FT OF TOP OF PIT; BORROW MATERIAL FROM SOURCES WITHIN 177 OPEN CUT AREA AND FROM ADJACENT WASTE ROCK SOURCES; MULTIPLE DISTINCT LOCATIONS WITHIN 177 OPEN CUT AREA
	177	10	PIT	15	12	180	3	10	BACKFILL OPEN CUT AREA TO WITHIN 4FT OF TOP OF PIT; BORROW MATERIAL FROM SOURCES WITHIN 177 OPEN CUT AREA AND FROM ADJACENT WASTE ROCK SOURCES; MULTIPLE DISTINCT LOCATIONS WITHIN 177 OPEN CUT AREA
	1786	13	PIT			100	6	22	BACKFILL PROSPECT PIT TO WITHIN 4FT OF TOP OF PIT; USE BORROW MATERIAL FROM 1781 WASTE ROCK PILE AND OTHER ADJACENT SOURCES
	1791	13	WALL			250	2	9	BACKFILL OPEN PIT WALL TO WITHIN 4FT OF TOP OF WALL; BORROW MATERIAL FROM 1781 WASTE ROCK PILE AND OTHER ADJACENT SOURCES; BACKFILL CONCURRENTLY WITH 1792
	1792	13	PIT			300	6	66	BACKFILL PROSPECT PIT TO WITHIN 4FT OF TOP OF PIT; BORROW MATERIAL FROM 1781 WASTE ROCK PILE AND OTHER ADJACENT SOURCES; BACKFILL CONCURRENTLY WITH 1791
	1795	13	PIT	6	4	24	1	1	BACKFILL PROSPECT PIT TO WITHIN 4FT OF TOP OF PIT; BORROW MATERIAL FROM 1781 WASTE ROCK PILE AND OTHER ADJACENT SOURCES; BACKFILL CONCURRENTLY WITH 1791 AND 1792
	1811	13	PIT			28	16	17	BACKFILL PROSPECT PIT TO WITHIN 4FT OF TOP OF PIT; BORROW MATERIAL FROM 187 WASTE ROCK PILE AND OTHER ADJACENT SOURCES

REV.	DATE	DESCRIPTION	BY	CHK'D
0	05/02/2022	PHASE I 90% DESIGN SUBMITTAL	JD	TH

REVISIONS

DRAWN BY: JD
CHECKED BY: TH
DATE: 4/27/2022
SCALE: NONE
FILE: 01A-BOSTON_DETAILS

Trihydro
CORPORATION
1252 Commerce Drive
Laramie, Wyoming 82070
www.trihydro.com
(P) 307/745.7474 (F) 307/745.7729

MACHINE WASTE ROCK BACKFILL
SUMMARY TABLE (1 OF 2)

BOSTON HILL MINE SAFEGUARD PROJECT (PHASE I)
NEW MEXICO ABANDONDED LAND MINE PROGRAM
SILVER CITY, NEW MEXICO

SHEET
15
15 OF 33
REV: 0

L:\NEW MEXICO - AML - DOCUMENTS\BOSTONHILL\CADD\PLANSET\01A-BOSTON_DETAILS

MACHINE WASTE ROCK BACKFILL SUMMARY CONTINUED

FEATURE		#		FT		SF	FT	CY	
TRIHYDRO ID	OKUN ID	SHEET	BACKFILL TYPE (WALL/PIT)	WIDTH	LENGTH	AREA	AVERAGE BACKFILL DEPTH	VOLUME	ADDITIONAL NOTES
	1816	13	PIT	20	20	400	16	237	BACKFILL PROSPECT PIT NEAR TRAIL TO WITHIN 4FT OF TOP OF PIT; BORROW MATERIAL FROM 1815 AND 1982 WASTE ROCK PILES AND OTHER ADJACENT SOURCES
	1823	13	PIT			300	3	33	BACKFILL OPEN CUT WALLS TO WITHIN 4FT OF TOP OF CUT; BORROW MATERIAL FROM 1827 WASTE ROCK PILE AND OTHER ADJACENT SOURCES
	1835	13	PIT	11	17	187	1	7	BACKFILL PROSPECT PIT TO WITHIN 4FT OF TOP OF PIT; BORROW MATERIAL FROM 1836 WASTE ROCK PILE AND OTHER ADJACENT SOURCES
	1840	12	PIT	20	20	400	17	251	BACKFILL PROSPECT PIT TO WITHIN 4FT OF TOP OF PIT; BORROW MATERIAL FROM 1774 WASTE ROCK PILE AND OTHER ADJACENT SOURCES
	1844	12	WALL			650	1	120	BACKFILL OPEN CUT WALLS TO WITHIN 4FT OF TOP OF CUT; BORROW MATERIAL FROM 1841, 1842, 1849, 1852 WASTE ROCK PILES AND OFF PHASE I BORROW SOURCES
	1845	12	PIT			260	15	144	BACKFILL PROSPECT PIT TO WITHIN 4FT OF TOP OF PIT; BORROW MATERIAL FROM 1841, 1842, 1849, 1852 WASTE ROCK PILES AND OFF PHASE I BORROW SOURCES
	1898	12	PIT	11	16	176	2	13	BACKFILL PROSPECT PIT TO WITHIN 4FT OF TOP OF PIT; BORROW MATERIAL FROM 1892 AND 2247 WASTE ROCK PILES AND GENERAL BORROW SOURCES
	1900	9	PIT	14	16	224	4	33	BACKFILL PROSPECT PIT TO WITHIN 4FT OF TOP OF PIT; BORROW MATERIAL FROM 1892 AND 2247 WASTE ROCK PILES AND GENERAL BORROW SOURCES
	1900	9	PIT	9	11	99	2	7	BACKFILL PROSPECT PIT TO WITHIN 4FT OF TOP OF PIT; BORROW MATERIAL FROM 1892 AND 2247 WASTE ROCK PILES AND GENERAL BORROW SOURCES
	1904	12	WALL	12	11	132	3	7	BACKFILL OPEN CUT WALLS TO WITHIN 4FT OF TOP OF WALL; BORROW MATERIAL FROM 1905 WASTE ROCK PILE AND OTHER ADJACENT SOURCES
	1911	10	PIT			100	4	15	BACKFILL PROSPECT PIT TO WITHIN 4FT OF TOP OF PIT; BORROW MATERIAL FROM 1900 AREA WASTE ROCK PILES AND OTHER ADJACENT SOURCES
	1972	13	PIT			150	3	16	BACKFILL PROSPECT PIT TO WITHIN 4FT OF TOP OF PIT; BORROW MATERIAL FROM 1971 AREA WASTE ROCK PILES AND OTHER ADJACENT SOURCES
	1973	13	PIT			220	3	25	BACKFILL PROSPECT PIT TO WITHIN 4FT OF TOP OF PIT; BORROW MATERIAL FROM 1974 AREA WASTE ROCK PILES AND OTHER ADJACENT SOURCES
	2233	9	PIT			150	4	22	BACKFILL PROSPECT PIT TO WITHIN 4FT OF TOP OF PIT; BORROW MATERIAL FROM OFF PHASE I SOURCES DUE TO PROXIMITY TO ACCESS
	2236	9	WALL	20	2	40	2	2	BACKFILL PROSPECT PIT TO WITHIN 4FT OF TOP OF PIT; BORROW MATERIAL FROM OFF PHASE I SOURCES DUE TO PROXIMITY TO ACCESS
	2240	10	PIT	17	19	323	7	83	BACKFILL PROSPECT PIT TO WITHIN 4FT OF TOP OF PIT; BORROW MATERIAL FROM 2241 AND 2242 WASTE ROCK PILES AND OTHER ADJACENT SOURCES
	2243	10	PIT	7	9	63	4	9	BACKFILL PROSPECT PIT TO WITHIN 4FT OF TOP OF PIT; BORROW MATERIAL FROM 2244 AND 2245 WASTE ROCK PILES AND OTHER ADJACENT SOURCES
	2263	9	PIT	12	4	48	2	4	BACKFILL PROSPECT PIT TO WITHIN 4FT OF TOP OF PIT; BORROW MATERIAL FROM 2262 AREA WASTE ROCK PILES AND OTHER ADJACENT SOURCES
	2274	10	PIT	10	10	100	4	15	BACKFILL PROSPECT PIT TO WITHIN 4FT OF TOP OF PIT; BORROW MATERIAL FROM 2277 AREA WASTE ROCK PILES AND OTHER ADJACENT SOURCES
	2323	10	PIT	4	5	20	3	3	BACKFILL PROSPECT PIT TO WITHIN 4FT OF TOP OF PIT; BORROW MATERIAL FROM 2327 AREA WASTE ROCK PILES AND OTHER ADJACENT SOURCES
	2323	10	PIT	7	7	49	4	14	BACKFILL PROSPECT PIT TO WITHIN 4FT OF TOP OF PIT; BORROW MATERIAL FROM 2327 AREA WASTE ROCK PILES AND OTHER ADJACENT SOURCES
	2330	10	WALL	40	16	640	4	50	BACKFILL OPEN CUT WALL TO WITHIN 4FT OF TOP OF WALL; BORROW MATERIAL FROM SOURCES WITHIN OPEN CUT AREA AND FROM ADJACENT WASTE ROCK SOURCES
	2342	8	PIT			1480	5120	190	BACKFILL PROSPECT PIT TO WITHIN 4FT OF TOP OF PIT; BORROW MATERIAL FROM ADJACENT BORROW SOURCES AND FROM OFF PHASE I SOURCES DUE TO PROXIMITY TO ACCESS
	2352	8	PIT	6	10	60	2	5	BACKFILL PROSPECT PIT TO WITHIN 4FT OF TOP OF PIT; BORROW MATERIAL FROM ADJACENT WASTE ROCK SOURCES
	2358	8	PIT			450	8	133	BACKFILL PROSPECT PIT TO WITHIN 4FT OF TOP OF PIT; BORROW MATERIAL FROM ADJACENT WASTE ROCK SOURCES AND FROM OFF PHASE I SOURCES DUE TO PROXIMITY TO ACCESS
	2361	8	WALL	6	12	72	3	4	BACKFILL OPEN CUT WALL TO WITHIN 4FT OF TOP OF WALL; BORROW MATERIAL FROM ADJACENT WASTE ROCK SOURCES
	2410	10	PIT	4	4	16	3	2	BACKFILL PROSPECT PIT TO WITHIN 4FT OF TOP OF PIT; BORROW MATERIAL FROM ADJACENT WASTE ROCK SOURCES
	2427	11	WALL			200	3	22	BACKFILL OPEN CUT WALL TO WITHIN 4FT OF TOP OF WALL; BORROW MATERIAL FROM WITHIN ADJACENT OPEN CUT AND FROM GENERAL BORROW SOURCES
	2444	11	WALL	19	12	228	6	25	BACKFILL OPEN CUT WALL TO WITHIN 4FT OF TOP OF WALL; BORROW MATERIAL FROM WITHIN ADJACENT OPEN CUT AND FROM GENERAL BORROW SOURCES
	2492	11	PIT			650	7	168	BACKFILL PROSPECT PIT TO WITHIN 4FT OF TOP OF PIT; BORROW MATERIAL FROM ADJACENT WASTE ROCK SOURCES AND FROM OFF PHASE I SOURCES DUE TO PROXIMITY TO ACCESS
	2528	8	PIT			147	2	11	BACKFILL PROSPECT PIT TO WITHIN 4FT OF TOP OF PIT; BORROW MATERIAL FROM WITHIN ADJACENT OPEN CUT AND FROM GENERAL BORROW SOURCES

REV.	DATE	DESCRIPTION	BY	CHK'D
0	05/02/2022	PHASE I 90% DESIGN SUBMITTAL	JD	TH

REVISIONS

DRAWN BY: JD
CHECKED BY: TH
DATE: 4/27/2022
SCALE: NONE
FILE: 01A-BOSTON_DETAILS

Trihydro
1252 Commerce Drive
Laramie, Wyoming 82070
www.trihydro.com
(P) 307/745.7474 (F) 307/745.7729

MACHINE WASTE ROCK BACKFILL SUMMARY TABLE (2 OF 2)

BOSTON HILL MINE SAFEGUARD PROJECT (PHASE I)
NEW MEXICO ABANDONED LAND MINE PROGRAM
SILVER CITY, NEW MEXICO

SHEET 16
16 OF 33
REV: 0

L:\NEW MEXICO – AML – DOCUMENTS\BOSTONHILL\CADD\PLANSET\01A–BOSTON_DETAILS

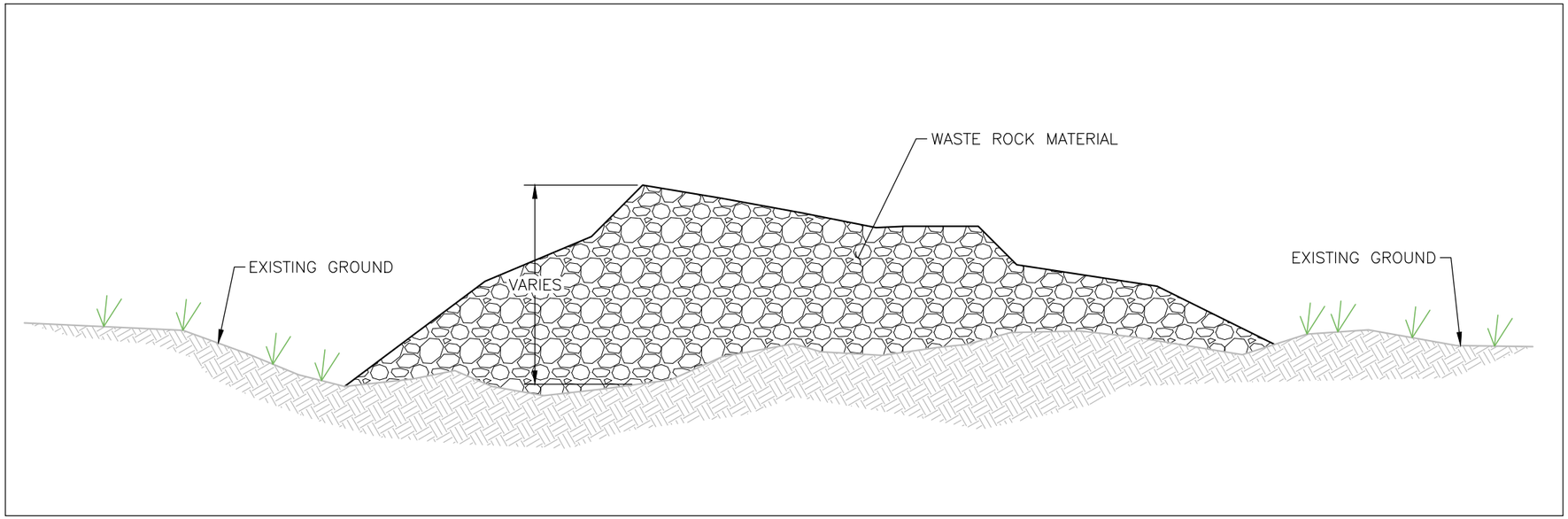

1 EXISTING WASTE ROCK PILE
SCALE: NONE

NOTES:

1. SEE SHEETS 18-19 FOR TABLES DETAILING INFORMATION ON PROPOSED WASTE ROCK BORROW AREAS LOCATIONS. THE FOLLOWING TABLES DETAIL BORROW LOCATIONS, AREAS, VOLUMES AND OTHER SPECIAL CONSIDERATIONS.
2. DISTURBANCE ASSOCIATED WITH WASTE ROCK BORROW REMOVAL WILL BE GREATER TO TIE INTO EXISTING TOPOGRAPHY.
3. DISTURBANCE AREAS WILL BE REVEGATED BY HYDROSEEDING/HYDROMULCHING OR HAND SEEDING DEPENDING ON EQUIPMENT ACCESS AND SIZE OF DISTURBANCE

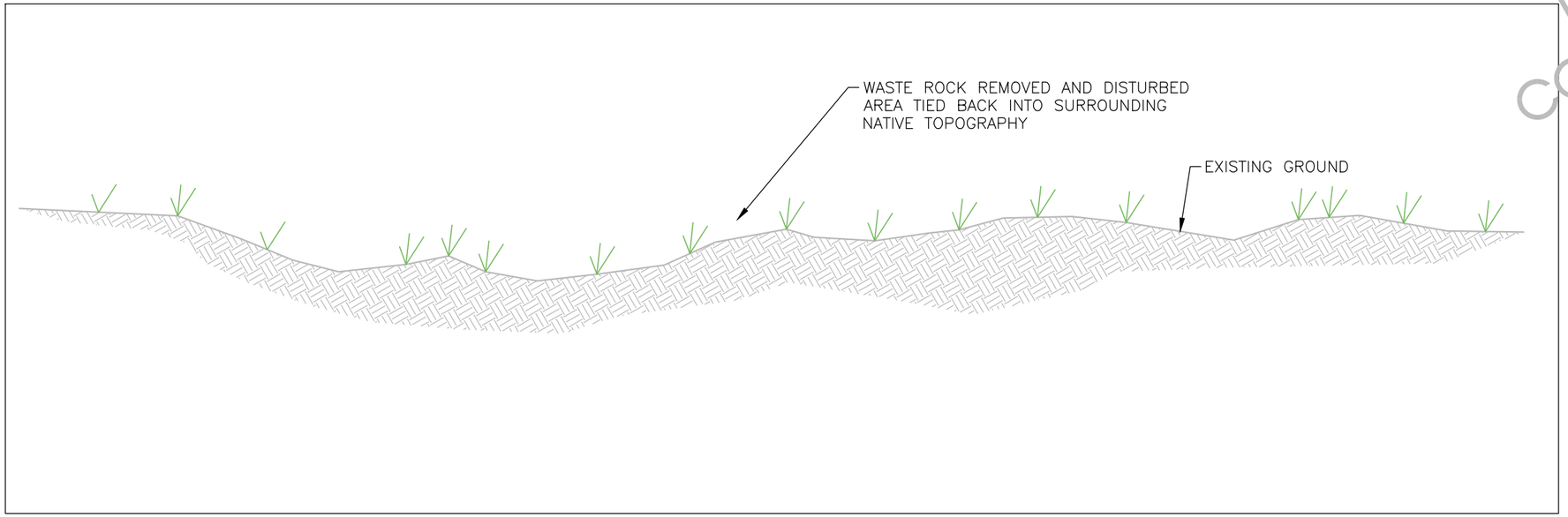

2 WASTE ROCK BORROW REMOVED
SCALE: NONE

REV.	DATE	DESCRIPTION	BY	CHK'D
0	05/02/2022	PHASE I 90% DESIGN SUBMITTAL	JD	TH

REVISIONS

DRAWN BY: JD
CHECKED BY: TH
DATE: 4/27/2022
SCALE: NONE
FILE: 01A-BOSTON_DETAILS

Trihydro Corporation
1252 Commerce Drive
Laramie, Wyoming 82070
www.trihydro.com
(P) 307/745.7474 (F) 307/745.7729

WASTE ROCK BORROW AREA DETAILS

BOSTON HILL MINE SAFEGUARD PROJECT (PHASE I)
NEW MEXICO ABANDONDED LAND MINE PROGRAM
SILVER CITY, NEW MEXICO

WASTE ROCK BORROW SUMMARY

FEATURE		#	FT		SF	FT	CY	
TRIHYDRO ID	OKUN ID	SHEET	WIDTH	LENGTH	AREA	AVERAGE REMOVAL DEPTH	VOLUME	ADDITIONAL NOTES
LT-137		10			150	1	6	BACKFILL AT FEATURE LT-138
LT-141	2288	10			100	1	4	2 SEPARATE PILES; BACKFILL AT FEATURE LT-140
LT-144		9			126	2	10	BACKFILL AT LEGAL TENDER SITES
LT-145	2124	7			665	1	25	BACKFILL AT LEGAL TENDER SITES
	59	7			7500	5	1389	LARGE WASTE ROCK AREA; BACKFILL AT LEGAL TENDER SITES OR FEATURE LT-142
	59	7			950	1.5-2	108	2 SMALLER PILES ASSOCIATED WITH FEATURE 59, BACKFILL AT LEGAL TENDER SITES
	60	7			943	1.5	52	BACKFILL AT LEGAL TENDER SITES
	73	5			180	2.5	17	BACKFILL AT FEATURES 71 AND 72
	74	7			1492	1.75	96	BACKFILL AT FEATURE LT-142
	77	7			3800	9	1267	LARGE WASTE ROCK AREA; BACKFILL AT LEGAL TENDER SITES OR FEATURE LT-142
	77	7			2400	2.5	220	LARGE WASTE ROCK AREA; BACKFILL AT LEGAL TENDER SITES OR FEATURE LT-142
	77	7			2080	3-4	290	2 SMALLER PILES ASSOCIATED WITH FEATURE 77, BACKFILL AT LEGAL TENDER SITES
	78	7			36	1	2	2 SMALL PILES; BACKFILL AT LEGAL TENDER SITES OR GENERAL USE
	86	4			189	1	7	BACKFILL AT FEATURE 85
	99	7			1107	1	41	GENERAL BACKFILL AS NEEDED
	101	7			828	2	61	GENERAL BACKFILL AS NEEDED
	103	8			1641	6	365	GENERAL BACKFILL AS NEEDED
	147	8			318	2	24	BACKFILL AT FEATURE 153
	148	8			42	1	2	BACKFILL AT FEATURE 153
	149	8					1	BACKFILL AT FEATURE 153
	150	8			115	1	4	BACKFILL AT FEATURE 153
	151	8			120	1.5	7	BACKFILL AT FEATURE 153
	151	8					1	BACKFILL AT FEATURE 153
	169	8			76	1	3	BACKFILL AT FEATURE 2342
	179	10			475	2	35	BACKFILL AT ADJACENT AREAS AS NEEDED
	947	5			61		4	BACKFILL AT FEATURE 94
	1693	13	20	20	400	4	60	BACKFILL AT ADJACENT AREAS AS NEEDED
	1700	13	30	9	270	1	10	BACKFILL AT FEATURE 1792
	1713	5			61	1.5	4	BACKFILL AT FEATURE 94
	1781	13			258	1	10	BACKFILL AT FEATURE 1786
	1796	13			48	1	2	BACKFILL AT FEATURE 1796
	1807	13			896	2	66	BACKFILL AT FEATURE1792
	1815	13			834	4	123	BACKFILL AT FEATURE 1816
	1817	13			627	6	139	BACKFILL AT FEATURE 1816
	1819	13			270	1.5	15	BACKFILL AT FEATURE 1816
	1827	13			204	1.5	11	BACKFILL AT FEATURE 1823
	1836	13	6	17	102	2	7	BACKFILL AT FEATURE 1816
	1841	12			272	1	10	BACKFILL AT FEATURES 1848 AND 1844
	1842	12	30	3	90	1	4	BACKFILL AT FEATURES 1848 AND 1844
	1849	12			102	1	4	BACKFILL AT FEATURES 1848 AND 1843
	1850	12			85	1	3	BACKFILL AT FEATURES 1848 AND 1843
	1892	9			193	1	7	BACKFILL AT FEATURE 1900
	1901	12			96	1	4	BACKFILL AT FEATURE 1898
	1902	9	25	6	150	1	3	BACKFILL AT FEATURE 1900
	1905	12	11	5	55	0.5	1	BACKFILL AT FEATURE 1905
	1906	10			89	1.5	5	BACKFILL AT FEATURE 1905
	1909	10	5	5	25	1	1	BACKFILL AT FEATURES 1904 AND 1905
	1911	13	10	10	100	1	4	BACKFILL AT FEATURE 1911
	1923	13			34	1.5	2	BACKFILL AT FEATURE 1919
	1924	10			144	2.5	13	BACKFILL AT ADJACENT AREAS AS NEEDED
	1929	13			81	1	3	BACKFILL AT FEATURE 1935
	1935	13	6	12	72	1.5	4	BACKFILL AT FEATURE 1935
	1936	13			47	1	2	BACKFILL AT FEATURE 1935
	1940	13			172.5	1	6	BACKFILL AT FEATURE 1935

REV.	DATE	DESCRIPTION	BY	CHK'D
0	05/02/2022	PHASE I 90% DESIGN SUBMITTAL	JD	TH

REVISIONS

DRAWN BY: JD
CHECKED BY: TH
DATE: 4/27/2022
SCALE: NONE
FILE: 01A-BOSTON_DETAILS

Trihydro
1252 Commerce Drive
Laramie, Wyoming 82070
www.trihydro.com
(P) 307/745.7474 (F) 307/745.7729

WASTE ROCK BORROW SUMMARY TABLE
(1 OF 2)

BOSTON HILL MINE SAFEGUARD PROJECT (PHASE I)
NEW MEXICO ABANDONDED LAND MINE PROGRAM
SILVER CITY, NEW MEXICO

WASTE ROCK BORROW SUMMARY CONTINUED

FEATURE		#	FT		SF	FT	CY	
TRIHYDRO ID	OKUN ID	SHEET	WIDTH	LENGTH	AREA	AVERAGE REMOVAL DEPTH	VOLUME	ADDITIONAL NOTES
	1964	11			166	1	6	BACKFILL AT FEATURE 2427
	1965	11			610	0.75	17	BACKFILL AT FEATURE 2427
	1966	11			231	1.5	13	BACKFILL AT FEATURE 2427
	1971	13			101	1.5	6	BACKFILL AT FEATURE 1972
	1974	13			376	1	14	BACKFILL AT FEATURE 1973
	1978	13			50	1	2	BACKFILL AT FEATURE 1973
	1979	13			186	1	7	BACKFILL AT FEATURE 1973
	1982	13			169	1	6	BACKFILL AT FEATURES 1981 AND 1984
	1989	8			1156	1	43	BACKFILL AT FEATURE 153
	2003	4			300	1	11	BACKFILL AT FEATURE 2032
	2015	4			500	1	18	BACKFILL AT FEATURE 2010 AREA
	2018	4			400	1	15	BACKFILL AT FEATURE 2010 OR 2032 AREA
	2033	4			100	1	4	BACKFILL AT FEATURE 2032
	2125	7			412	1	15	BACKFILL AT LEGAL TENDER SITES; LOCATED ON LEGAL TENDER FENCELINE
	2212	7			834	3	93	BACKFILL AT LEGAL TENDER SITES
	2215	7			1149	1	42	BACKFILL AT LEGAL TENDER SITES
	2216	7			36	2	3	BACKFILL AT LEGAL TENDER SITES
	2217	7			20	2	2	BACKFILL AT LEGAL TENDER SITES
	2239	9	5	5	25	2	2	BACKFILL AT FEATURE 2234
	2241	10			210	4	31	BACKFILL AT FEATURE 2240
	2242	10			129	4	20	BACKFILL AT FEATURE 2240
	2245	10			225	1	9	BACKFILL AT FEATURE 2243
	2247	9			631	2	46	BACKFILL AT FEATURE 1900
	2262	9			154	1.5	9	BACKFILL AT FEATURE 2263
	2265	9			244	1	9	BACKFILL AT FEATURE 2263 AND OTHER ADJACENT FEATURES
	2285	7			362	1	13	BACKFILL AT FEATURE LT-140 AND OTHER ADJACENT FEATURES
	2287	7			145	1.5	8	BACKFILL AT FEATURE LT-140 AND OTHER ADJACENT FEATURES
	2293	7			810	3	91	2 DISTINCT WASTE ROCK AREAS; BACKFILL AT FEATURE 2296
	2300	7			2577	1.5	143	BACKFILL AT FEATURE 2296
	2311	10			308	1	12	BACKFILL AT FEATURE 177 AND OTHER ADJACENT FEATURES
	2313	10			311	2	23	BACKFILL AT FEATURES 2323 AND 2325 AND OTHER ADJACENT FEATURES
	2327	10			111	2	8	BACKFILL AT FEATURES 2323 AND 2325 AND OTHER ADJACENT FEATURES
	2329	10			621	2	46	BACKFILL AT FEATURE 2409
	2335	10			77	2	6	BACKFILL AT FEATURE 2409
	2345	8			725	2	53	BACKFILL AT FEATURE 2342
	2353	8			275	1	10	BACKFILL AT FEATURE 2352
	2359	8			200	1	7	BACKFILL AT FEATURE 2358
	2362	8			254	1	9	BACKFILL AT FEATURE 2361
	2385	8			187	1	7	BACKFILL AT FEATURE 2342
	2386	8			211	1	8	BACKFILL AT FEATURE 2342
	2412	10			155	1	6	BACKFILL AT FEATURE 2410
	2445	11			459	1	17	BACKFILL AT FEATURE 2444
	2446	11			192	1	7	BACKFILL AT FEATURE 2444
	2470	11			183	1	7	BACKFILL AT FEATURE 2444
	2482	11			276	1.5	15	BACKFILL AT ADJACENT AREAS AS NEEDED
	2486	11			178	1.5	10	BACKFILL AT ADJACENT AREAS AS NEEDED
	2495	11			316	2	23	BACKFILL AT FEATURE 2492
	2540	8			233	2.5	22	BACKFILL AT FEATURE 2539
	2804	10			277	2	21	BACKFILL AT FEATURE 177 AND OTHER ADJACENT FEATURES
	2806	10			190	3	22	BACKFILL AT FEATURE 177 AND OTHER ADJACENT FEATURES
	2809	10			344	3	38	BACKFILL AT FEATURE 177 AND OTHER ADJACENT FEATURES
	2814	5			46		2	BACKFILL AT FEATURE 94

REV.	DATE	DESCRIPTION	BY	CHK'D
0	05/02/2022	PHASE I 90% DESIGN SUBMITTAL	JD	TH

REVISIONS

DRAWN BY: JD
CHECKED BY: TH
DATE: 4/27/2022
SCALE: NONE
FILE: 01A-BOSTON_DETAILS

Trihydro
1252 Commerce Drive
Laramie, Wyoming 82070
www.trihydro.com
(P) 307/745.7474 (F) 307/745.7729

WASTE ROCK BORROW SUMMARY TABLE
(2 OF 2)

BOSTON HILL MINE SAFEGUARD PROJECT (PHASE I)
NEW MEXICO ABANDONDED LAND MINE PROGRAM
SILVER CITY, NEW MEXICO

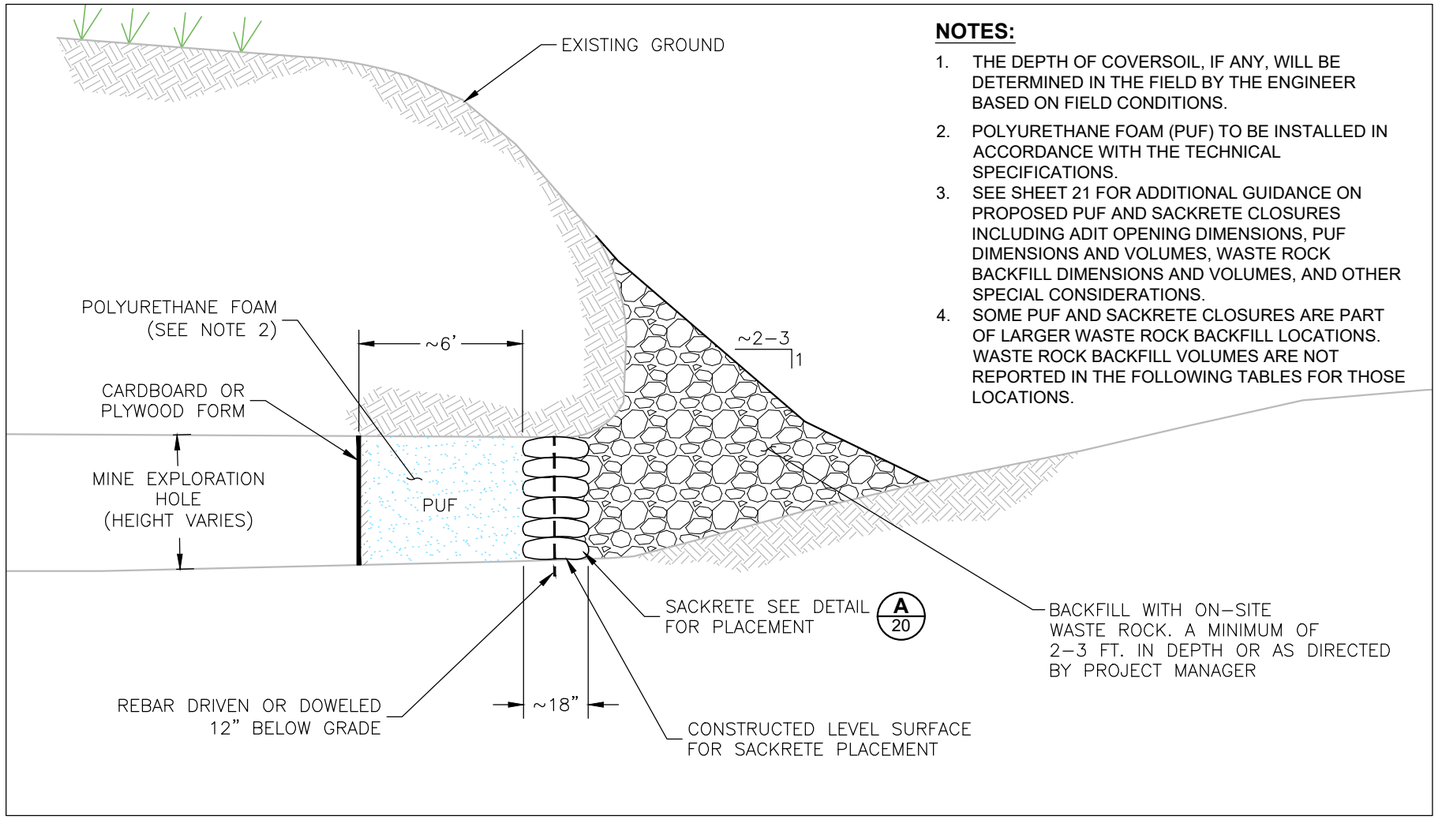

NOTES:

1. THE DEPTH OF COVERSOIL, IF ANY, WILL BE DETERMINED IN THE FIELD BY THE ENGINEER BASED ON FIELD CONDITIONS.
2. POLYURETHANE FOAM (PUF) TO BE INSTALLED IN ACCORDANCE WITH THE TECHNICAL SPECIFICATIONS.
3. SEE SHEET 21 FOR ADDITIONAL GUIDANCE ON PROPOSED PUF AND SACKRETE CLOSURES INCLUDING ADIT OPENING DIMENSIONS, PUF DIMENSIONS AND VOLUMES, WASTE ROCK BACKFILL DIMENSIONS AND VOLUMES, AND OTHER SPECIAL CONSIDERATIONS.
4. SOME PUF AND SACKRETE CLOSURES ARE PART OF LARGER WASTE ROCK BACKFILL LOCATIONS. WASTE ROCK BACKFILL VOLUMES ARE NOT REPORTED IN THE FOLLOWING TABLES FOR THOSE LOCATIONS.

1 POLYURETHANE FOAM (PUF) AND SACKRETE ADIT CLOSURE
SCALE: NONE

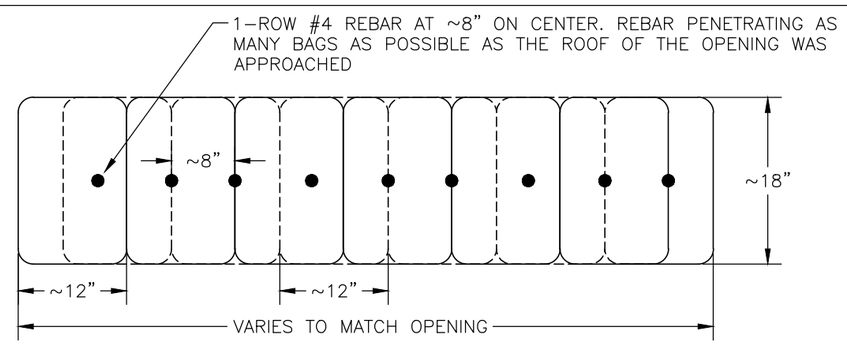

NOTES:

1. FIRST TWO LAYERS OF SACKRETE SHOWN.
2. PRE-CONSTRUCTION GROUND IN FRONT OF OPENING WAS LEVELED TO ALLOW FOR FIRST LAYER OF SACKRETE PLACEMENT.
3. REBAR LAPS ARE ~6" MINIMUM, TIED TOGETHER WITH WIRE.
4. EACH LAYER OF SACKRETE BAGS WAS THOROUGHLY SATURATED WITH WATER BEFORE PLACING THE NEXT LAYER OF BAGS. PAPER WAS LEFT ON BAGS. HOLES WERE OPENED IN THE TOP OF EACH BAG AFTER PLACEMENT OVER REBAR TO FACILITATE WETTING.

A SACKRETE PLACEMENT DETAIL
SCALE: NONE

Source: AVI, Cheyenne, WY, 2008

L:\NEW MEXICO – AML – DOCUMENTS\BOSTONHILL\CADD\PLANSET\01A–BOSTON_DETAILS

REV.	DATE	DESCRIPTION	BY	CHK'D
0	05/02/2022	PHASE I 90% DESIGN SUBMITTAL	JD	TH

REVISIONS

DRAWN BY: JD
CHECKED BY: TH
DATE: 4/27/2022
SCALE: NONE
FILE: 01A-BOSTON_DETAILS

Trihydro
1252 Commerce Drive
Laramie, Wyoming 82070
www.trihydro.com
(P) 307/745.7474 (F) 307/745.7729

90% DRAFT NOT FOR CONSTRUCTION

POLYURETHANE FOAM. SACKRETE, AND WASTE ROCK CLOSURE DETAIL

BOSTON HILL MINE SAFEGUARD PROJECT (PHASE I)
NEW MEXICO ABANDONDED LAND MINE PROGRAM
SILVER CITY, NEW MEXICO

POLYURETHANE FOAM (PUF), SACKRETE, AND WASTE ROCK ADIT CLOSURE SUMMARY

FEATURE		#	FT		SF	FT	CY	#	FT			SF	FT	CY	
TRIHYDRO ID	OKUN ID	SHEET	PUF/ SACKRETE HEIGHT	PUF/ SACKRETE WIDTH	PUF/ SACKRETE AREA	PUF AVERAGE DEPTH	PUF VOLUME	BAGS OF SACKRETE	LENGTH OF #4 REBAR	WASTE ROCK BACKFILL DIM. 1	WASTE ROCK BACKFILL DIM. 2	WASTE ROCK FILL AREA	WASTE ROCK FILL AVERAGE DEPTH	WASTE ROCK FILL VOLUME	ADDITIONAL NOTES
GL-4	165	10	5	10	50	4	7.4	111	42						WASTE ROCK COVER PART OF GL-11 HIGHWALL MACHINE BACKFILL AREA
GL-5	2820	10	4	9	36	4	5.3	80	26.25	9	6	54	3	6	BORROW WASTE ROCK COVER FROM ADJACENT WASTE ROCK PILES
LT-8	2128	7	9	10	90	4	13.3	200	90	9	10	90	3	10.0	BORROW WASTE ROCK COVER FROM 2125 WASTE ROCK PILE
LT-10	2130	7	3	17	51	3	5.7	113	33.75	17	3	51	3	5.7	BORROW WASTE ROCK COVER FROM 2213 WASTE ROCK PILE
LT-11	2130	7	4	9	36	3	4.0	80	26.25	9	4	36	3	4.0	BORROW WASTE ROCK COVER FROM 2213 WASTE ROCK PILE
LT-15	2144	9	6	11	66	3	7.3	147	60.75						WASTE ROCK COVER PART OF LT-113 HIGHWALL MACHINE BACKFILL AREA
LT-17	2142	9	14	14	196	3	21.8	436	225						WASTE ROCK COVER PART OF LT-113 HIGHWALL MACHINE BACKFILL AREA
LT-18	2142	9	5	7.5	37.5	3	4.2	83	28.875						WASTE ROCK COVER PART OF LT-113 HIGHWALL MACHINE BACKFILL AREA
LT-110	2131	7	4	5	20	3	2.2	44	11.25	4	5	20	3	2.2	BORROW WASTE ROCK COVER FROM 2213 WASTE ROCK PILE
LT-111	2133	7	4	6.5	26	3	2.9	58	16.875	6.5	4	26	3	2.9	BORROW WASTE ROCK COVER FROM LEGAL TENDER WASTE ROCK PIT
LT-114	2147	9	4	9	36	3	4.0	80	26.25	9	6	54	3	6.0	BORROW WASTE ROCK COVER FROM LEGAL TENDER WASTE ROCK PIT
LT-122	2153	7	3	6	18	3	2.0	40	9	6	3	18	2	1.3	BORROW WASTE ROCK COVER FROM LEGAL TENDER WASTE ROCK PIT
LT-139		10	10	15	150	3	16.7	333	165.75			260	2	19	BORROW WASTE ROCK COVER FROM ADJACENT WASTE ROCK PILES
LT-140		10	4	8	32	3	3.6	71	22.5			300	2	22	BORROW WASTE ROCK COVER FROM LT-141 AND 2287 WASTE ROCK PILES
	1935	13	8	12	96	3	10.7	213	97.5	8	16	128	9	21	BORROW WASTE ROCK COVER FROM ADJACENT WASTE ROCK PILES

REV.	DATE	DESCRIPTION	BY	CHK'D
0	05/02/2022	PHASE I 90% DESIGN SUBMITTAL	JD	TH

REVISIONS

DRAWN BY: JD
CHECKED BY: TH
DATE: 4/27/2022
SCALE: NONE
FILE: 01A-BOSTON_DETAILS

Trihydro CORPORATION
1252 Commerce Drive
Laramie, Wyoming 82070
www.trihydro.com
(P) 307.745.7474 (F) 307.745.7729

PUF, SACKCRETE, AND WASTE ROCK ADIT CLOSURE SUMMARY TABLE

BOSTON HILL MINE SAFEGUARD PROJECT (PHASE I)
NEW MEXICO ABANDONED LAND MINE PROGRAM
SILVER CITY, NEW MEXICO

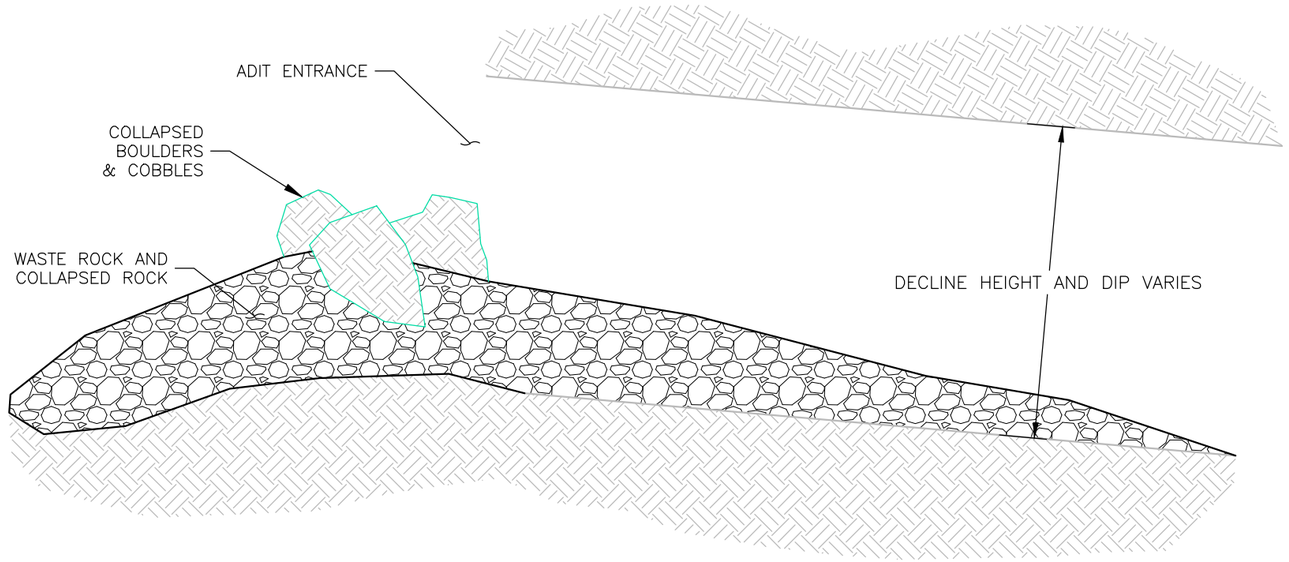

1 PROFILE OF EXISTING ADIT OPENING (TYPICAL)
SCALE: NONE

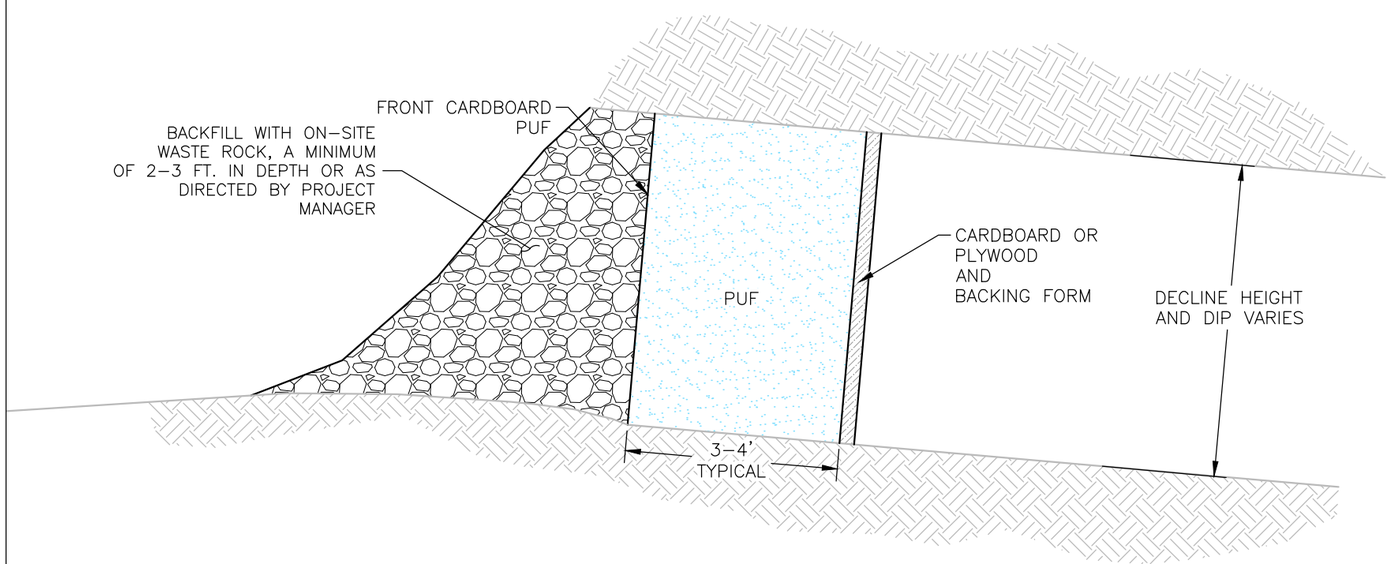

2 PUF AND WASTE ROCK ADIT CLOSURE
SCALE: NONE

NOTES:

1. MUCK OPEN ADITS AS REQUIRED FOR CONSTRUCTION.
2. BECAUSE OF POTENTIAL POOR ROCK CONDITIONS AND THE POSSIBILITIES OF ROCK FALL OR COLLAPSE AND BAD AIR, ALL WORK SHALL BE COMPLETED WITHOUT WORKERS ENTERING INTO THE ADIT OPENINGS.
3. FILL ALL VOID SPACES IN THE FILL ZONE AS COMPLETELY AS PRACTICABLE AND WITH NO MORE THAN A SIX-INCH GAP BETWEEN THE FILL AND ADIT ROOF.
4. SHAPE THE FINAL GRADE TO SMOOTHLY TRANSITION INTO AND BLEND WITH THE SURROUNDING SLOPES. SHAPE EXISTING SLOPES AROUND THE DISTURBED AREA AS REQUIRED TO A MAXIMUM SLOPE OF 2:1 AND AS ACCEPTABLE TO THE PROJECT MANAGER. THE FINAL ONE FOOT OF FILL SHALL BE MINIMUM 3-INCH, MAXIMUM 9-INCH, MINE WASTE ROCK OR NATIVE SURFACE ROCK.
5. POLYURETHANE FOAM (PUF) THICKNESS WILL NOT VARY (6FT); HOWEVER, THE DIMENSIONS OF THE PORTAL AND ADIT MAY VARY
6. THE PUF INSTALLATION SHALL BE PERFORMED IN A MANNER TO PREVENT VOID SPACES BETWEEN THE ADIT WALLS. FORM WORK SHALL BE COMPLETED PRIOR TO APPLICATION OF PUF.
7. AFTER THE PROJECT MANAGER APPROVES THE FINAL GRADE, AMEND, SEED AND MULCH DISTURBED SOILS AS SPECIFIED.

REV.	DATE	DESCRIPTION	BY	CHK'D
0	05/02/2022	PHASE I 90% DESIGN SUBMITTAL	JD	TH

REVISIONS

DRAWN BY: JD
CHECKED BY: TH
DATE: 4/27/2022
SCALE: NONE
FILE: 01A-BOSTON_DETAILS

Trihydro
1252 Commerce Drive
Laramie, Wyoming 82070
www.trihydro.com
(P) 307/745.7474 (F) 307/745.7729

POLYURETHANE FOAM AND WASTE ROCK ADIT CLOSURE DETAIL

BOSTON HILL MINE SAFEGUARD PROJECT (PHASE I)
NEW MEXICO ABANDONDED LAND MINE PROGRAM
SILVER CITY, NEW MEXICO

SHEET **22**
22 OF 33
REV: 0

L:\NEW MEXICO – AML – DOCUMENTS\BOSTONHILL\CADD\PLANSET\01A-BOSTON_DETAILS

POLYURETHANE FOAM (PUF) AND WASTE ROCK ADIT CLOSURE SUMMARY

FEATURE		#		FT		SF	FT	CY	FT		SF	FT	CY		
TRIHYDRO ID	OKUN ID	SHEET	TYPE OF CLOSURE (VERTICAL/ HORIZONTAL)	PUF DIM. 1	PUF DIM. 2	PUF AREA	PUF AVERAGE DEPTH	PUF VOLUME	WASTE ROCK BACKFILL DIMENSION 1	WASTE ROCK BACKFILL DIMENSION 2	WASTE ROCK FILL AREA	WASTE ROCK FILL AVERAGE DEPTH	WASTE ROCK FILL VOLUME	TYPE OF FILL (TRIANGULAR/ RECTANGULAR)	ADDITIONAL NOTES
BH-6		4	HORIZONTAL	2	3	6	2	0.4	3	3	9	3	1.0	UNIFORM	WASTE ROCK COVER BY HAND BACKFILL
GL-6	471	10	HORIZONTAL	9	15	135	4	20.0							WASTE ROCK COVER PART OF GL-11 HIGHWALL MACHINE BACKFILL AREA
GL-7	2822	10	HORIZONTAL	6	5	30	4	4.4							WASTE ROCK COVER PART OF GL-11 HIGHWALL MACHINE BACKFILL AREA
	141	7	HORIZONTAL	6	10	60	4	8.9			850	4	125	UNIFORM	
	157	8	HORIZONTAL	10	6	60	4	8.9			220	6	25	TRIANGULAR	TRIANGULAR FILL, MACHINE PLACEMENT, USE WASTROCK FROM IMMEDIATELY ADJACENT OPEN CUT AREA
	2032	4	HORIZONTAL	4	5	20	3	2.2	9	10	90	2	6	UNIFORM	USE ADJACENT WASTE ROCK MATERIAL
	2296	7	HORIZONTAL	7	5	35	4	5.2			470	4	70	UNIFORM	
	2367	8	HORIZONTAL	7	2	14	3	1.6	7	2	14	3	1.6	UNIFORM	USE ADJACENT WASTE ROCK FOR BACKFILL IN FRONT OF PUF AND UNDER ARCH

REV.	DATE	DESCRIPTION	BY	CHK'D
0	05/02/2022	PHASE I 90% DESIGN SUBMITTAL	JD	TH

REVISIONS

DRAWN BY: JD
CHECKED BY: TH
DATE: 4/27/2022
SCALE: NONE
FILE: 01A-BOSTON_DETAILS

Trihydro
1252 Commerce Drive
Laramie, Wyoming 82070
www.trihydro.com
(P) 307/745.7474 (F) 307/745.7729

POLYURETHANE FOAM AND WASTE ROCK ADIT CLOSURE SUMMARY TABLE

BOSTON HILL MINE SAFEGUARD PROJECT (PHASE I)
NEW MEXICO ABANDONDED LAND MINE PROGRAM
SILVER CITY, NEW MEXICO

SHEET 23
23 OF 33
REV: 0

L:\NEW MEXICO – AML – DOCUMENTS\BOSTONHILL\CADD\PLANSET\01A–BOSTON_DETAILS

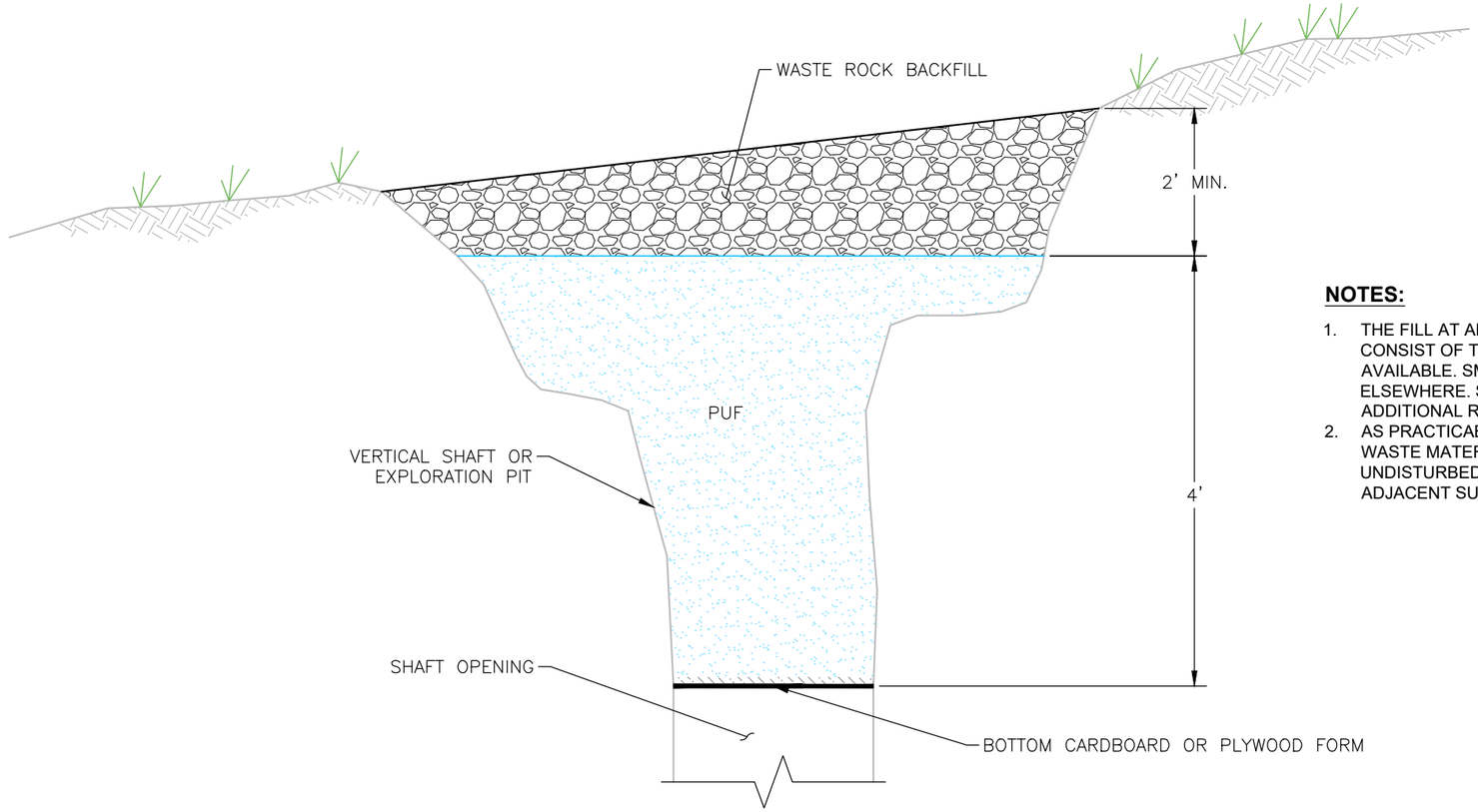

NOTES:

1. THE FILL AT AND ABOVE DRIFT LEVELS SHALL CONSIST OF THE COARSEST MATERIAL AVAILABLE. SMALLER MATERIAL MAY BE USED ELSEWHERE. SEE THE SPECIFICATIONS FOR ADDITIONAL REQUIREMENTS.
2. AS PRACTICABLE, SHAPE THE REMAINING MINE WASTE MATERIAL TO RESEMBLE AN UNDISTURBED MINE WASTE PILE OR TIE INTO ADJACENT SURROUNDING TOPOGRAPHY.

1 **PUF AND WASTE ROCK VERTICAL (SHAFT) CLOSURE**
SCALE: NONE

POLYURETHANE FOAM (PUF) AND WASTE ROCK VERTICAL SHAFT CLOSURE SUMMARY

FEATURE		#		FT		SF	FT	CY	FT		SF	FT	CY		
TRIHYDRO ID	OKUN ID	SHEET	TYPE OF CLOSURE (VERTICAL/ HORIZONTAL)	PUF DIM. 1	PUF DIM. 2	PUF AREA	PUF AVERAGE DEPTH	PUF VOLUME	WASTE ROCK BACKFILL DIMENSION 1	WASTE ROCK BACKFILL DIMENSION 2	WASTE ROCK FILL AREA	WASTE ROCK FILL AVERAGE DEPTH	WASTE ROCK FILL VOLUME	TYPE OF FILL (TRIANGULAR/ RECTANGULAR)	ADDITIONAL NOTES
GL-9	167	10	VERTICAL	11	5	55	4	8.1	11	5	55	2	4.1	UNIFORM	WASTE ROCK COVER BORROW FROM ADJACENT WASTE ROCK SOURCES
LT-119	2120	7	VERTICAL	6	3	18	3	2.0	3	6	18	2	1.3	UNIFORM	WASTE ROCK COVER BORROW FROM LEGAL TENDER ADJACENT WASTE ROCK SOURCES
	71	5	VERTICAL			50	4	7.4			50	2	3.7	UNIFORM	
	72	5	VERTICAL			70	3	7.8			70	2	5.2	UNIFORM	
	85	4	VERTICAL			100	4	14.8			100	2	7.4	UNIFORM	MACHINE BACKFILL WASTE ROCK USING NEARBY AND OFFSITE BORROW SOURCES

REV.	DATE	DESCRIPTION	BY	CHK'D
0	05/02/2022	PHASE I 90% DESIGN SUBMITTAL	JD	TH

REVISIONS

DRAWN BY: JD
CHECKED BY: TH
DATE: 4/27/2022
SCALE: NONE
FILE: 01A-BOSTON_DETAILS

Trihydro
1252 Commerce Drive
Laramie, Wyoming 82070
www.trihydro.com
(P) 307/745.7474 (F) 307/745.7729

PUF & WASTE ROCK VERTICAL SHAFT CLOSURE DETAIL AND SUMMARY TABLE

BOSTON HILL MINE SAFEGUARD PROJECT (PHASE I)
NEW MEXICO ABANDONED LAND MINE PROGRAM
SILVER CITY, NEW MEXICO

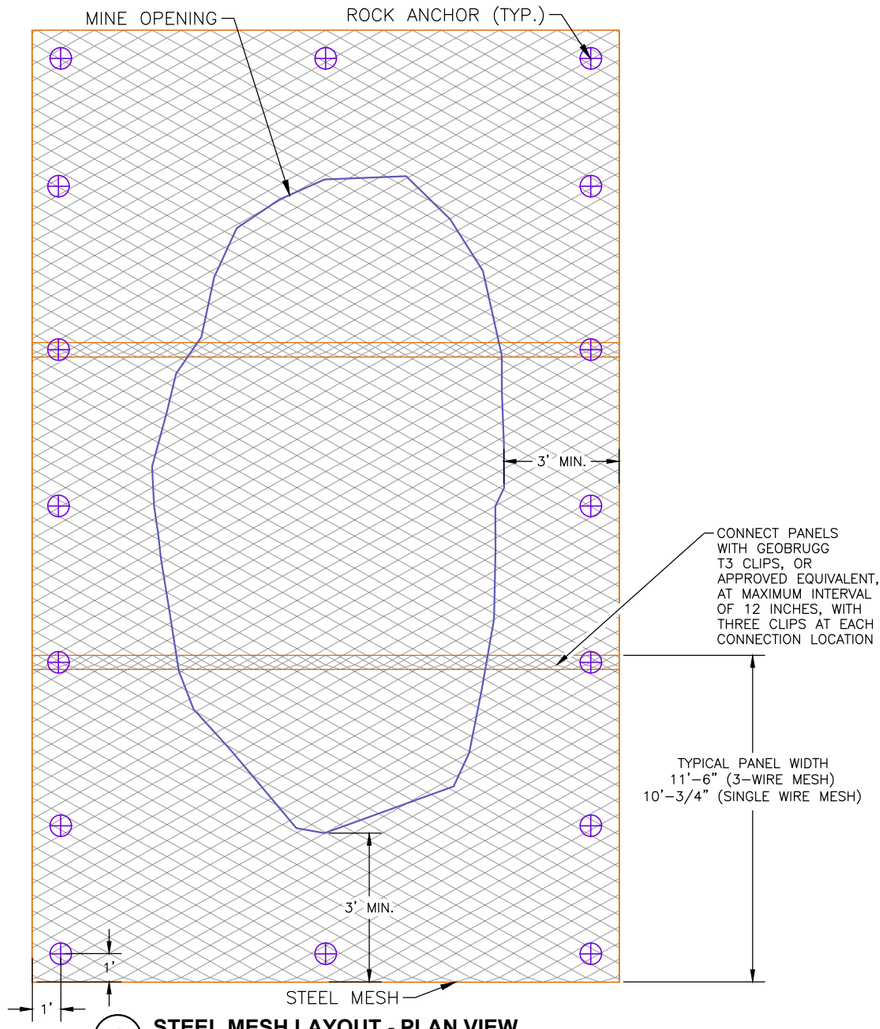

1 STEEL MESH LAYOUT - PLAN VIEW
SCALE: NONE

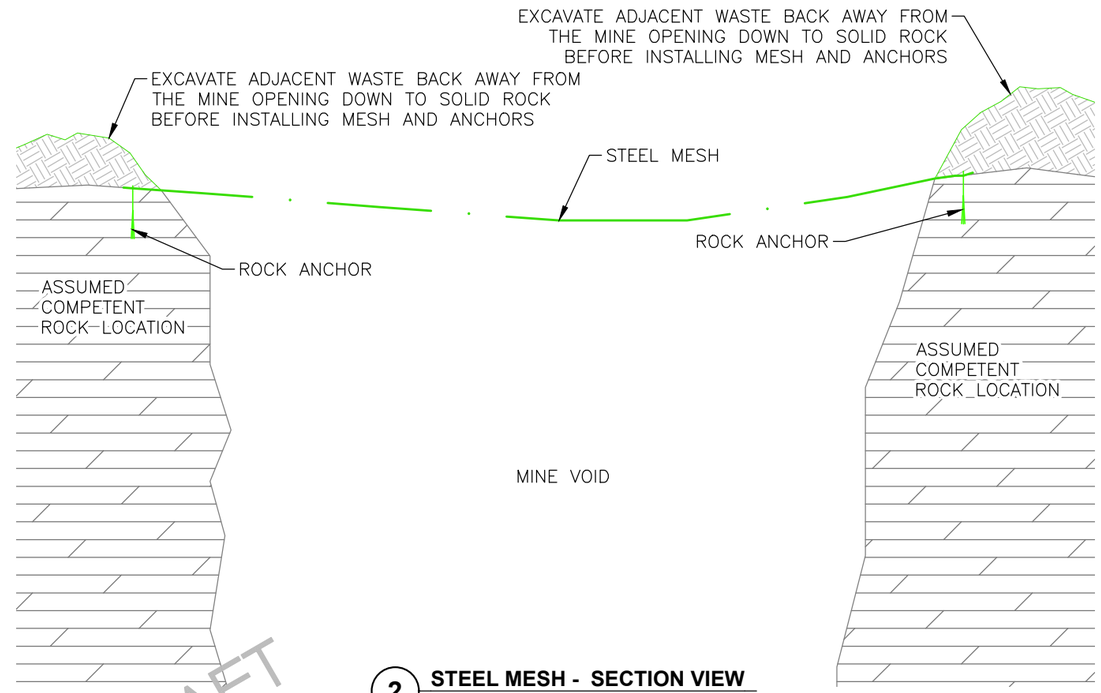

2 STEEL MESH - SECTION VIEW
SCALE: NONE

NOTES:

1. THE LOCATION AND DIMENSIONS INDICATED FOR THE STEEL MESH AND MINE OPENING ARE APPROXIMATE. ADJUST THE POSITION AND AREA OF THE MESH FOR FIELD CONDITIONS.
2. THE STEEL MESH INSTALLED FOR FEATURES LT-2, LT-3, LT-101, AND LOT-103, SHALL BE GEOBRUGG SPIDER S4-130 HIGH-TENSILE SPIRAL ROPE NET OR APPROVED EQUIVALENT.
3. THE ROCK ANCHOR LOCATIONS INDICATED ARE PRELIMINARY. ADJUST LOCATIONS AND NUMBER OF ANCHORS TO FIT FIELD CONDITIONS. ANCHORS SHALL BE SPACED NO MORE THAN TEN FEET FROM THE NEAREST ANCHOR. LOCATE ANCHORS TO AVOID THIN BACK AREAS, AT MESH INSTALLATION CORNERS, ALONG MESH EDGES, AND AS REQUIRED TO SNUG THE MESH ONTO THE GROUND SURFACE.
4. PULL BACK WASTE PILES FROM THE MINE OPENING PERIMETER AS NEEDED TO ALLOW FOR THE PROPER INSTALLATION OF THE MESH. REGRADE THE MOVED MATERIAL AS DIRECTED BY THE PROJECT MANAGER TO BLEND IN WITH THE EXISTING WASTE PILES. MINIMIZE THE AMOUNT OF MATERIAL THAT FALLS INTO THE MINE OPENING AND THE AREA OF DISTURBED GROUND AROUND THE MINE FEATURE.
5. WHERE THE STEEL MESH IS PLACED OVER THE EXISTING GROUND, COVER THE MESH WITH AT LEAST THREE INCHES OF WASTE ROCK MATERIAL, IF GROUND SLOPE ALLOWS, AS DIRECTED BY THE PROJECT MANAGER
6. ESTIMATED LENGTHS DO NOT ACCOUNT FOR SAG OF MESH.

Source: New Mexico Energy, Minerals, and Natural Resources Department, 2018

NOTE:

MESH TYPE A: GEOBRUGG ROLLED CABLE NET 0/8.6/190, OR APPROVED EQUIVALENT.
MESH TYPE B: GEOBRUGG SPIDER S4-130 HIGH-TENSILE SPIRAL ROPE NET, OR APPROVED EQUIVALENT

STEEL MESH CLOSURE SUMMARY

FEATURE	#			FT		SF	FT	#		
TRIHYDRO ID	SHEET	MESH ROLLS	MESH PANELS	MESH ROLL WIDTH	MESH ROLL LENGTH	MESH PANEL AREA	TOTAL OVERLAP LENGTH	CLIPS	ANCHORS	ADDITIONAL NOTES
LT-2/3	9	7	18	11	98	7500	662	1986	86	
LT-101/103	7/9	28	31	11	98	29200	2734	8202	148	10 OF THE 31 PANELS WILL REQUIRE MESH RUNS LONGER THAN 98FT

REV.	DATE	DESCRIPTION	BY	CHK'D
0	05/02/2022	PHASE I 90% DESIGN SUBMITTAL	JD	TH

REVISIONS

DRAWN BY: JD
CHECKED BY: TH
DATE: 4/27/2022
SCALE: NONE
FILE: 01A-BOSTON_DETAILS-2

Trihydro
1252 Commerce Drive
Laramie, Wyoming 82070
www.trihydro.com
(P) 307/745.7474 (F) 307/745.7729

STEEL MESH CLOSURE DETAIL AND SUMMARY TABLE

BOSTON HILL MINE SAFEGUARD PROJECT (PHASE I)
NEW MEXICO ABANDONED LAND MINE PROGRAM
SILVER CITY, NEW MEXICO

TYPICAL

NOTES:

1. STEEL SHAPES, PLATES AND BARS SHALL BE WEATHERING STEEL. WELD EACH PICKET ALONG BOTH SIDES AND ACROSS THE TOP AT THE TOP AND BOTTOM RAILS. OTHERWISE WELD ALL JOINTS CONTINUOUSLY. GRIND WELDS SMOOTH.
2. IN SOLID ROCK, SET POSTS INTO 5-INCH DIAMETER HOLES DRILLED TO A DEPTH OF AT LEAST EIGHT INCHES AND GROUT IN PLACE.
3. TRIM PICKETS SO THAT THERE IS A ONE-INCH SPACE BETWEEN THE BOTTOM OF THE PICKET AND GROUND SURFACE. MAKE THE TOP OF PICKETS A STRAIGHT LINE BETWEEN POSTS.
4. THE PROJECT MANAGER SHALL DETERMINE THE LAYOUT OF THE FENCE AND PROXIMITY TO THE MINE OPENING. AS A GENERAL RULE, THE FENCE SHALL BE OFFSET FROM OPENING BY THREE TO FOUR FEET.

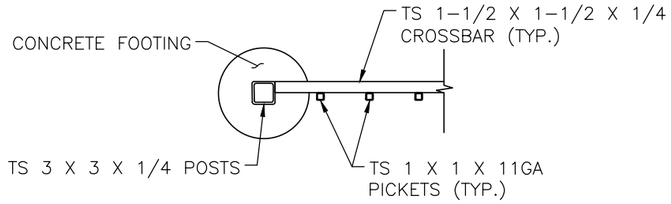

1 PLAN SECTION VIEW
SCALE: NONE

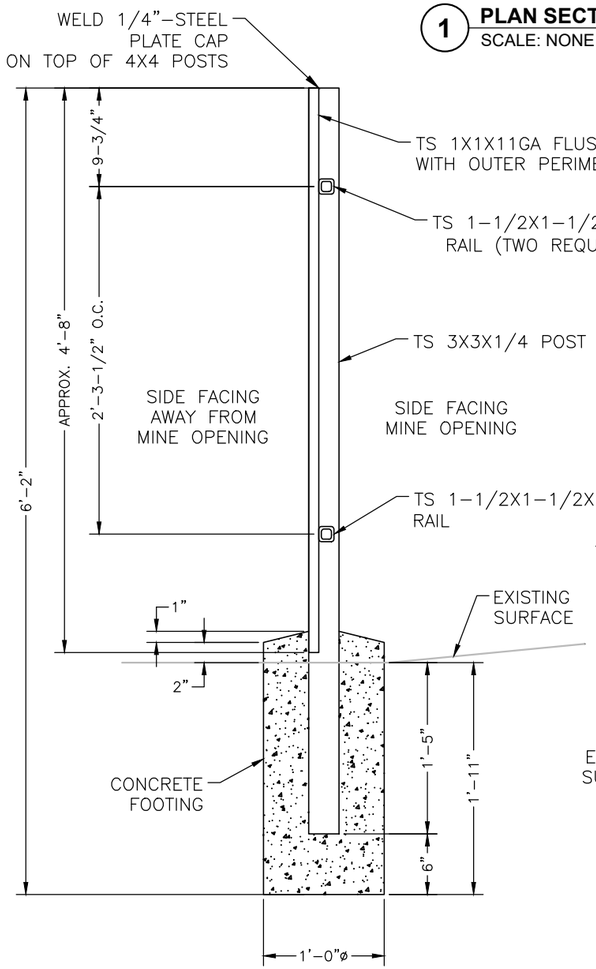

2 POST SECTION VIEW
SCALE: NONE

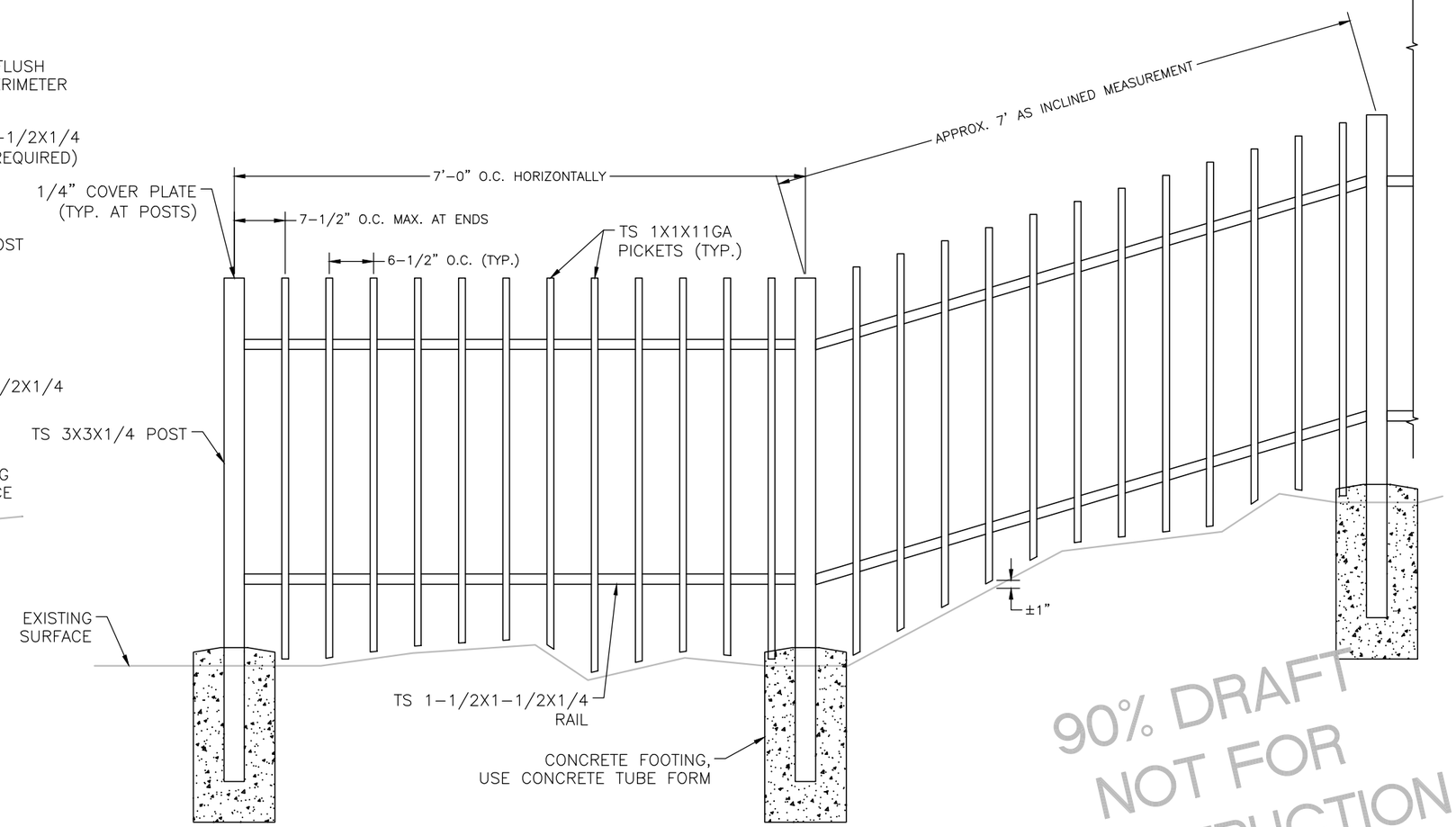

3 ELEVATION VIEW
SCALE: NONE

90% DRAFT
NOT FOR
CONSTRUCTION

METAL BARRIER FENCE SUMMARY

FEATURE		#	FT	
TRIHYDRO ID	OKUN ID	SHEET	BARRIER FENCE LENGTH	ADDITIONAL NOTES
GL-10	165	10	50	INSTALL BARRIER FENCE; UNABLE TO BACKFILL HIGHWALL HERE
	65	4	100	INSTALL BARRIER FENCE AT CREST OF HIGHWALL; VERY LIMITED EQUIPMENT ACCESS
LT-2/3		9	500	ALTERNATE SAFEGUARD FEATURE FOR LT-2/3
LT-101/103		7/9		ALTERNATE SAFEGUARD FEATURE FOR LT-101/103

Source: New Mexico Energy, Minerals, and Natural Resources Department, 2018

REV.	DATE	DESCRIPTION	BY	CHK'D
0	05/02/2022	PHASE I 90% DESIGN SUBMITTAL	JD	TH

REVISIONS

DRAWN BY: JD
CHECKED BY: TH
DATE: 05/02/2022
SCALE: NONE
FILE: 01A-BOSTON_DETAILS-4

Trihydro
1252 Commerce Drive
Laramie, Wyoming 82070
www.trihydro.com
(P) 307/745.7474 (F) 307/745.7729

METAL BARRIER FENCE DETAIL AND SUMMARY TABLE

BOSTON HILL MINE SAFEGUARD PROJECT (PHASE I)
NEW MEXICO ABANDONED LAND MINE PROGRAM
SILVER CITY, NEW MEXICO

L:\NEW MEXICO – AML – DOCUMENTS\BOSTONHILL\CADD\PLANSET\01A-BOSTON_DETAILS-4

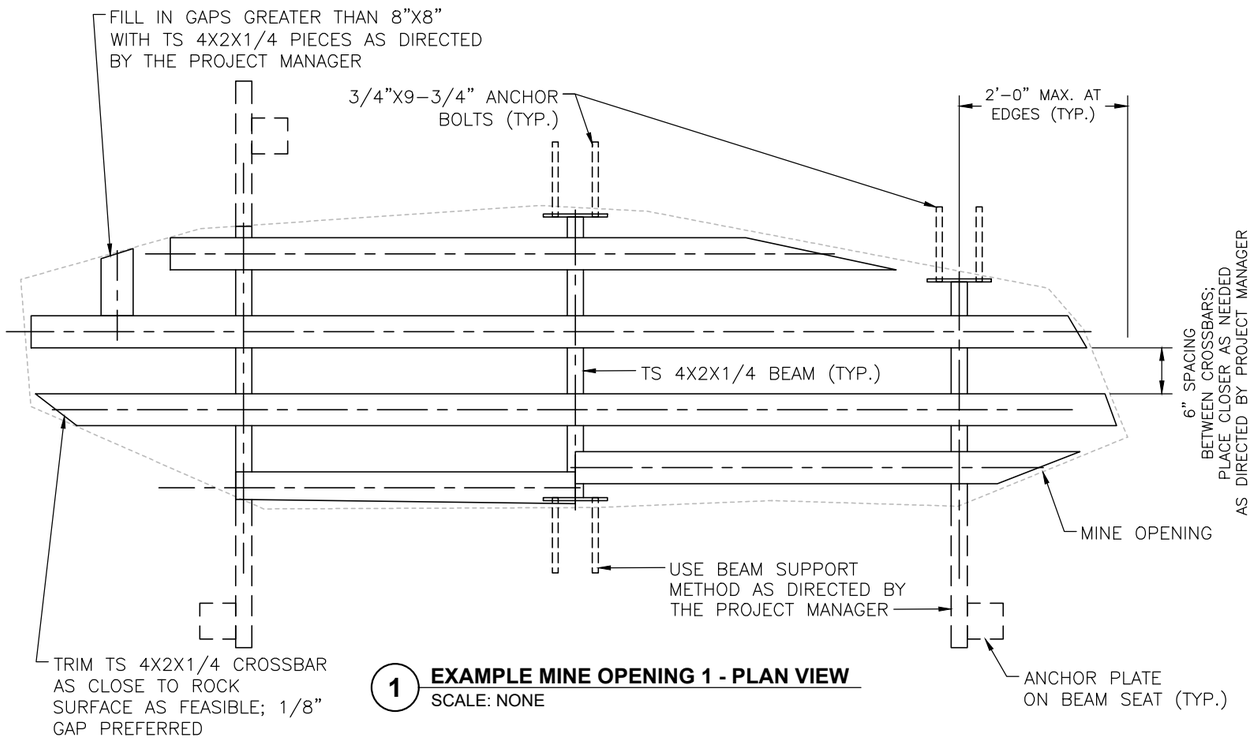

① **EXAMPLE MINE OPENING 1 - PLAN VIEW**
SCALE: NONE

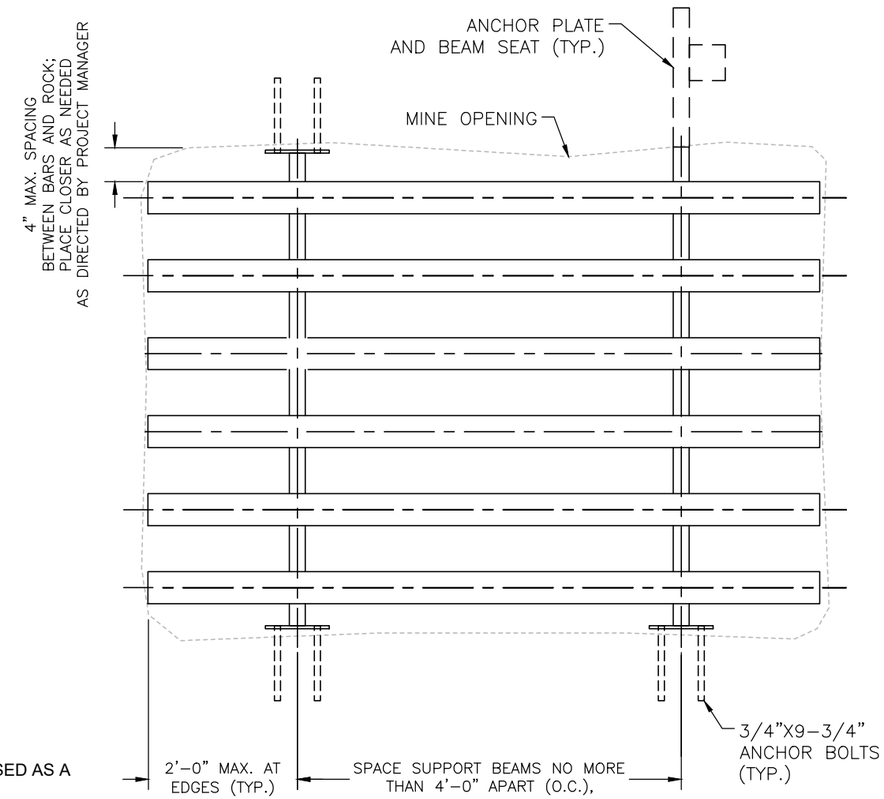

② **EXAMPLE MINE OPENING 2 - PLAN VIEW**
SCALE: NONE

NOTES:

1. THIS DRAWING SHOWS TWO EXAMPLE MINE OPENINGS AND THE CORRESPONDING LAYOUTS OF THE STEEL CLOSURE. THE DRAWING SHALL BE USED AS A GUIDE FOR FIELD LAYOUT. DETERMINE THE ACTUAL LAYOUTS AND DIMENSIONS OF THE CLOSURES IN THE FIELD PRIOR TO FABRICATION.
2. INSTALL HORIZONTAL GRATE CLOSURES AS CLOSE TO THE TOP OF THE SHAFT OPENINGS AS POSSIBLE, WHERE THE ROCK AT THE GATE LOCATIONS IS FULLY COMPETENT AND THE ANCHORS ARE PLACED AT LEAST 10" BELOW THE TOP OF THE ROCK.
3. REMOVE LOOSE ROCK AT CLOSURES PRIOR TO FABRICATION AND FIELD ERECTION OF THE CLOSURES. MINIMIZE THE AMOUNT OF ROCK AND OTHER DEBRIS THAT FALL INTO THE MINE OPENINGS DURING CONSTRUCTION. PULL LOOSE MATERIAL UP AND AWAY FROM THE MINE AREA.
4. USE BEAM SUPPORTS OR BEAM SEATS, AT CONTRACTOR'S DISCRETION AND APPROVAL FROM THE PROJECT MANAGER, TO FASTEN BEAM ENDS TO COMPETENT ROCK.
5. UNLESS OTHERWISE ACCEPTED BY THE PROJECT MANAGER, PLACE TS BEAMS ACROSS THE SPAN (WIDTH) OF THE SHAFT OPENING.

METAL GRATE CLOSURE SUMMARY

FEATURE		#		FT		SF	FT	#	FT	#		
TRIHYDRO ID	OKUN ID	SHEET	TYPE OF CLOSURE (VERTICAL/HORIZONTAL/ SLOPED)	WIDTH	HEIGHT	GRATE AREA	GRATE PERIMETER	GRATE CROSS-BARS	GRATING	ANCHORS	ANCHOR BOLTS	ADDITIONAL NOTES
GL-2	166	7	HORIZONTAL	22	10	220	64	6	20	12	48	GLOBE MINE SLOPED GRATE CLOSURE TO SOFTEN HIGHWALL AND CLOSE STOPE
LT-115	2149	7	HORIZONTAL	12	9	108	42	3	18	6	24	LEGAL TENDER AREA VERTICAL OPENING CLOSURE
LT-116	2152	7	HORIZONTAL	20	12	240	64	5	24	10	40	LEGAL TENDER AREA VERTICAL OPENING CLOSURE
LT-118	2120	7	HORIZONTAL	12	5	60	34	3	10	6	24	LEGAL TENDER AREA VERTICAL OPENING CLOSURE
LT-119	2160	7	HORIZONTAL	6	3	18	18	2	6	4	16	LEGAL TENDER AREA VERTICAL OPENING CLOSURE
LT-120	2159	7	HORIZONTAL	4	10	40	28	1	20	2	8	LEGAL TENDER AREA VERTICAL OPENING CLOSURE
LT-134	2146	9	VERTICAL	6	5	30	22	2	10	4	16	ALTERNATE CLOSURE FOR VOIDS IN LARGE ROCK BOULDERS PART OF LT-134 GRATE CLOSURE AREA
LT-134	2146	9	VERTICAL	6	5	30	22	2	10	4	16	ALTERNATE CLOSURE FOR VOIDS IN LARGE ROCK BOULDERS PART OF LT-134 GRATE CLOSURE AREA
LT-134	2146	9	VERTICAL	6	5	30	22	2	10	4	16	ALTERNATE CLOSURE FOR VOIDS IN LARGE ROCK BOULDERS PART OF LT-134 GRATE CLOSURE AREA

Source: New Mexico Energy, Minerals, and Natural Resources Department, 2018

L:\NEW MEXICO – AML – DOCUMENTS\BOSTONHILL\CADD\PLANSET\01A-BOSTON_DETAILS-4

REV.	DATE	DESCRIPTION	BY	CHK'D
0	05/02/2022	PHASE I 90% DESIGN SUBMITTAL	JD	TH

REVISIONS

DRAWN BY: JD
CHECKED BY: TH
DATE: 05/02/2022
SCALE: NONE
FILE: 01A-BOSTON_DETAILS-4

Trihydro
CORPORATION
1252 Commerce Drive
Laramie, Wyoming 82070
www.trihydro.com
(P) 307/745.7474 (F) 307/745.7729

HORIZONTAL METAL GRATE CLOSURE DETAIL

BOSTON HILL MINE SAFEGUARD PROJECT (PHASE I)
NEW MEXICO ABANDONDED LAND MINE PROGRAM
SILVER CITY, NEW MEXICO

SHEET
27
27 OF 33
REV: **0**

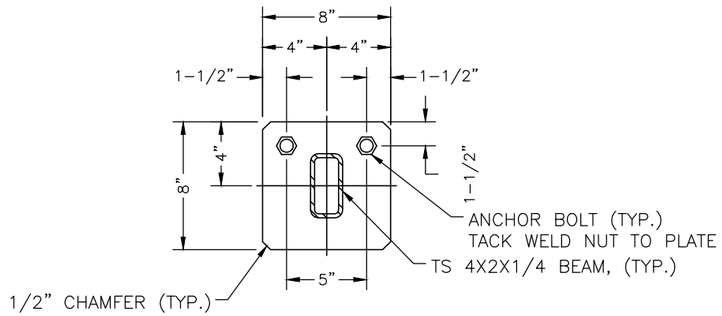

PLAN

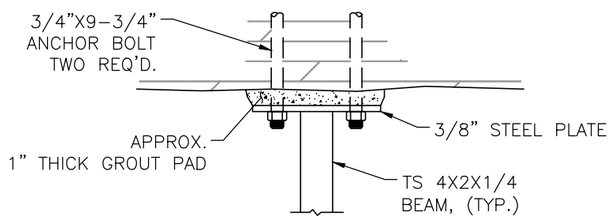

ELEVATION

1 BEAM SUPPORT DETAIL
SCALE: NONE

CONTRACTOR HAS THE OPTION OF ANGLING BEAM SUPPORT WITH THE ROCK FACE UPWARD OR VERTICALLY.

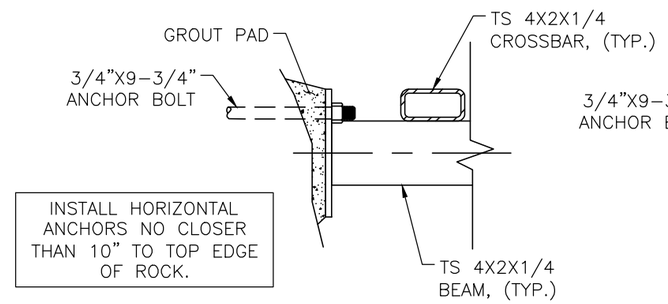

INSTALL HORIZONTAL ANCHORS NO CLOSER THAN 10" TO TOP EDGE OF ROCK.

SECTION-BEAM SUPPORT AT 90°

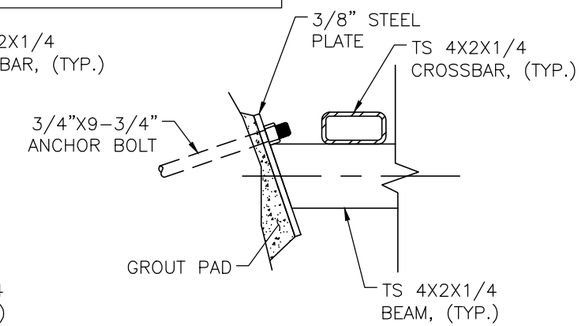

SECTION-BEAM SUPPORT AT ANGLE

2 BEAM SUPPORT SIDE SECTION
SCALE: NONE

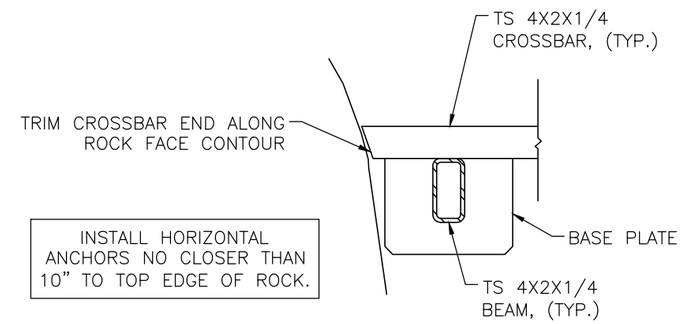

INSTALL HORIZONTAL ANCHORS NO CLOSER THAN 10" TO TOP EDGE OF ROCK.

3 BEAM-CROSSBAR SECTION VIEW
SCALE: NONE

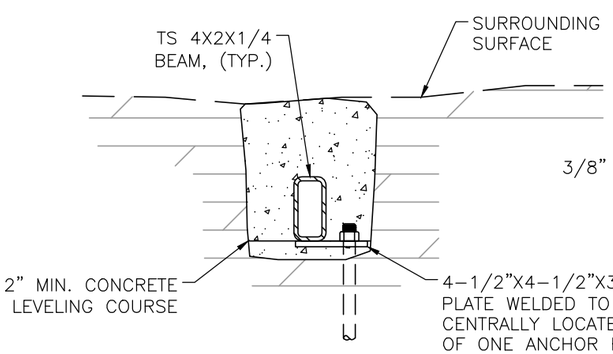

POUR MIN. 2" CONCRETE, SET BEAM, POUR 3' MIN. COVER OVER END, SIDES AND TOP OF BEAM

CROSS SECTION

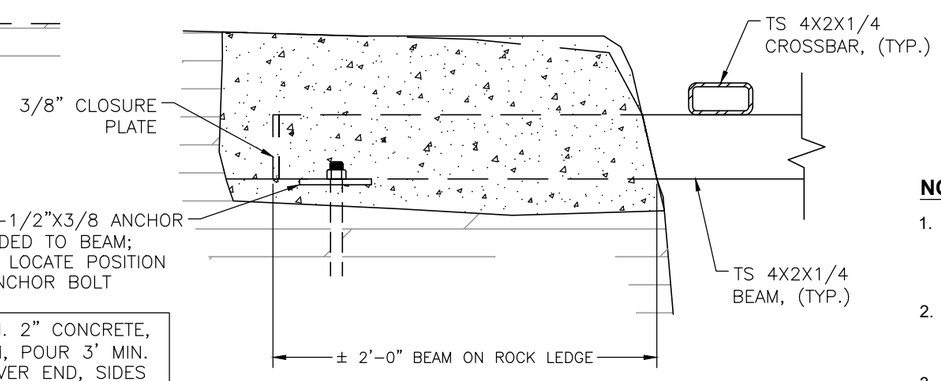

LONGITUDINAL SECTION

4 BEAM SEAT DETAILS
SCALE: NONE

NOTES:

1. POSITION CLOSURE AT THE TOP OF THE SHAFT AT A STABLE LOCATION AS DIRECTED BY THE PROJECT MANAGER. IF THERE IS POTENTIAL FOR ROCK ACCUMULATION FROM ABOVE, STRUCTURE SHOULD BE ANGLED DOWNHILL IF POSSIBLE TO ALLOW THE ROCKS TO SLIDE OFF.
2. MINIMIZE THE AMMOUNT OF ROCK AND OTHER DEBRIS THAT FALL INTO THE MINE OPENINGS DURING CONSTRUCTION. PULL LOOSE MATERIAL UP AND AWAY FROM THE MINE AREA.
3. USE BEAM SUPPORTS OR BEAM SEATS, AT CONTRACTOR'S OPTION WITH CONCURRENCE FROM THE PROJECT MANAGER, TO FASTEN BEAM ENDS TO COMPETENT ROCK.
4. STEEL SHAPES, PLATES AND BARS SHALL BE WEATHER OR STAINLESS STEEL.
5. PUT 3/4" CHAMFER ON ANY CONCRETE EDGES.
6. ANCHOR BOLTS SHALL BE ZINC-PLATED HILTI HIT ADHESIVE ANCHORS OR APPROVED EQUIVALENT. FOLLOW MANUFACTURER'S RECOMMENDATIONS REGARDING INSTALLATION.
7. DO NOT FILL BEAMS WITH CONCRETE OR GROUT.
8. INSTALL SURVEY MARKER (SUPPLIED BY AML PROGRAM) INTO ADJACENT COMPETENT ROCK AS DIRECTED BY THE PROJECT MANAGER.

Source: New Mexico Energy, Minerals, and Natural Resources Department, 2018

REV.	DATE	DESCRIPTION	BY	CHK'D
0	05/02/2022	PHASE I 90% DESIGN SUBMITTAL	JD	TH

REVISIONS

DRAWN BY: JD
CHECKED BY: TH
DATE: 05/02/2022
SCALE: NONE
FILE: 01A-BOSTON_DETAILS-4

Trihydro
1252 Commerce Drive
Laramie, Wyoming 82070
www.trihydro.com
(P) 307/745.7474 (F) 307/745.7729

HORIZONTAL METAL GRATE CLOSURE ADDITIONAL DETAIL

**BOSTON HILL MINE SAFEGUARD PROJECT (PHASE I)
NEW MEXICO ABANDONDED LAND MINE PROGRAM
SILVER CITY, NEW MEXICO**

NOTES:

1. THIS DRAWING SHOWS A GENERAL SHAPE AND APPROXIMATE PROFILE OF A LARGE ADIT CLOSURE. USE THE DRAWING AS A GUIDE FOR FIELD LAYOUT OF THE CLOSURE. FIELD VERIFY DIMENSIONS PRIOR TO FABRICATION.
2. TUBULAR STEEL, STEEL PLATES, AND SHAPES SHALL BE WEATHERING STEEL AS SPECIFIED. WELD ALL JOINTS. JOINTS SHALL BE TIGHT SO THAT MOISTURE CANNOT ENTER BETWEEN PLIES OF MATERIAL. ROUND OR CHAMFER ALL SHARP EDGES AND CORNERS.
3. PRIOR TO CONSTRUCTING THE FOOTER, REMOVE RUBBLE TO BEDROCK.
4. PLACE A 3/4" CHAMFER ON ALL EXPOSED EDGES OF CONCRETE FOOTER.
5. TOLERANCES ON THE CENTER-TO-CENTER DIMENSIONS BETWEEN POSTS SHALL BE ± 1/8".

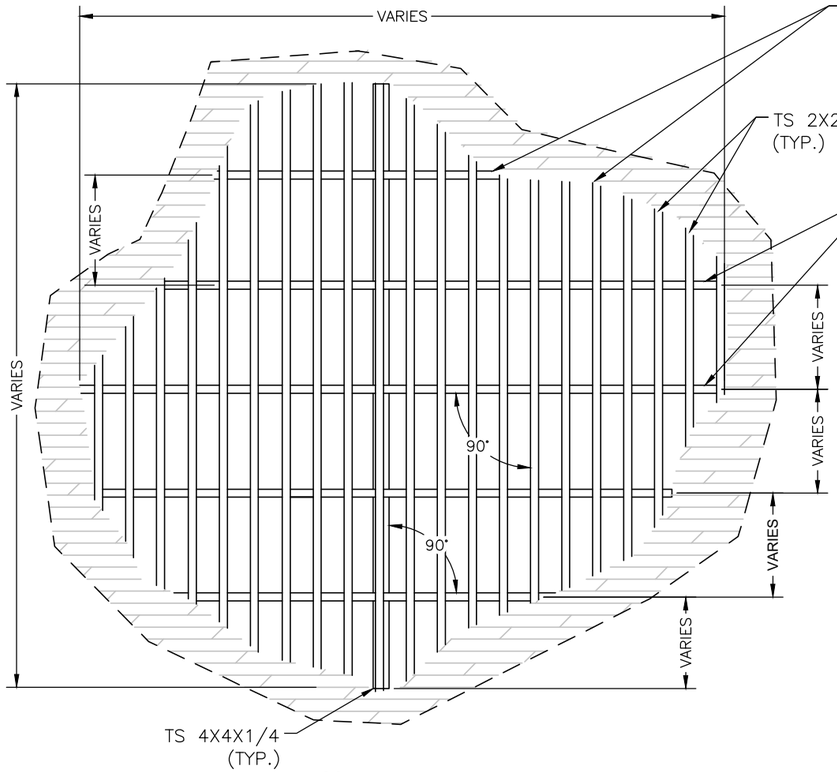

1 **SECTION A-A**
SCALE: NONE

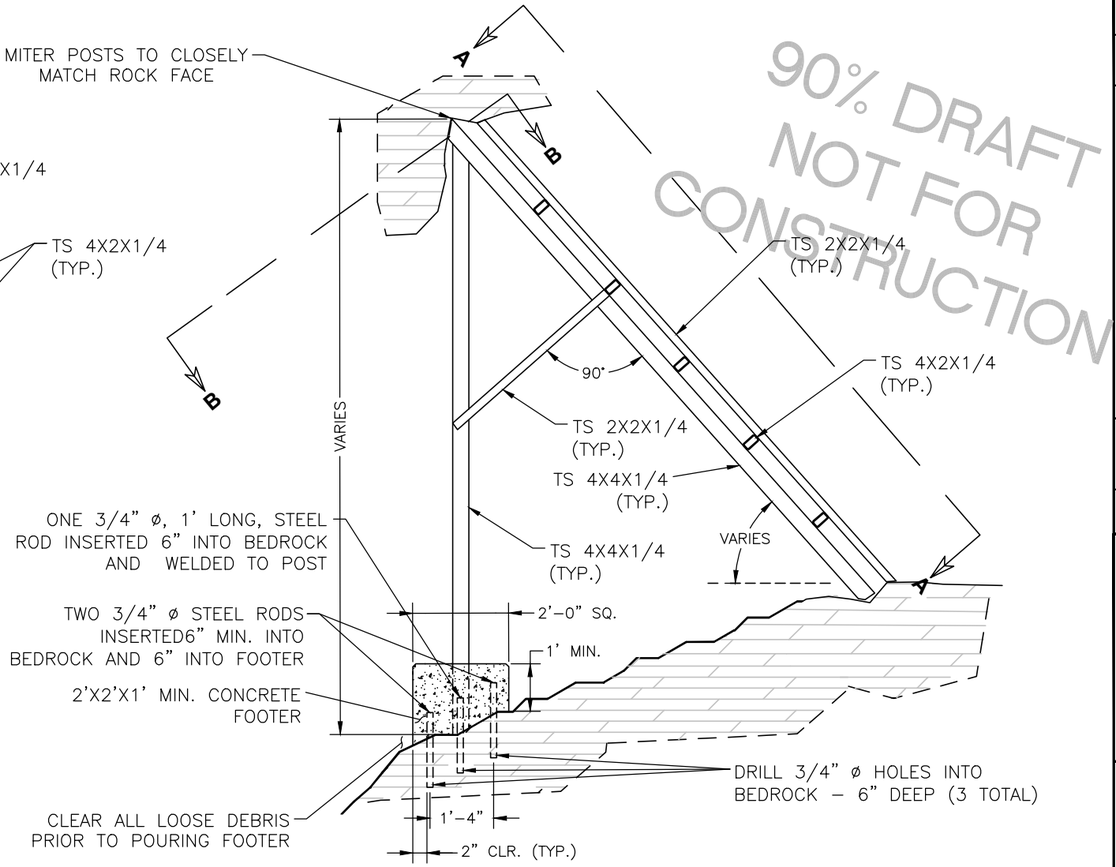

3 **PROFILE VIEW - SECTION**
SCALE: NONE

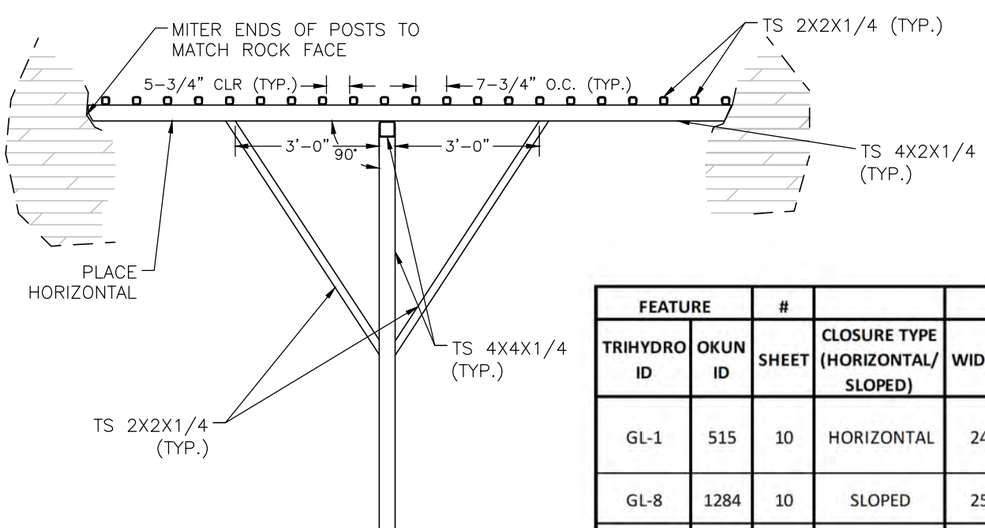

2 **SECTION B-B**
SCALE: NONE

ADIT AND STOPE METAL GRATE CLOSURE SUMMARY

FEATURE		#		FT		SF	FT	LFT		FT	#			
TRIHYDRO ID	OKUN ID	SHEET	CLOSURE TYPE (HORIZONTAL/ SLOPED)	WIDTH	HEIGHT	GRATE AREA	GRATE PERIMETER	GRATE CROSS-BARS 4X2	GRATING-2X2	COLUMN HEIGHT	COLUMNS	CONCRETE FOOTINGS	ANCHOR BOLTS	ADDITIONAL NOTES
GL-1	515	10	HORIZONTAL	24	22	528	92	242	1152	20	3	3	9	GLOBE MINE AREA VERTICAL OPENING CLOSURE; QUANTITIES COVER 3 SEPARATE OPENINGS
GL-8	1284	10	SLOPED	25	10	250	70	50	1250	12	1	1	3	GLOBE MINE SLOPED GRATE CLOSURE TO SOFTEN HIGHWALL AND CLOSE STOPE
LT-134	2134	9	SLOPED	25	25	625	100	313	1250	25	6	6	18	LEGAL TENDER LT-134 MAIN ADIT GRATE CLOSURE AREA - NORTH SECTION
LT-134	2134	9	SLOPED	35	20	700	110	200	2450	25	2	2	6	LEGAL TENDER LT-134 MAIN ADIT GRATE CLOSURE AREA - SOUTH SECTION

Source: New Mexico Energy, Minerals, and Natural Resources Department, 2018

REV.	DATE	DESCRIPTION	BY	CHK'D
0	05/02/2022	PHASE I 90% DESIGN SUBMITTAL	JD	TH

REVISIONS

DRAWN BY: JD
CHECKED BY: TH
DATE: 05/02/2022
SCALE: NONE
FILE: 01A-BOSTON_DETAILS-4

Trihydro
1252 Commerce Drive
Laramie, Wyoming 82070
www.trihydro.com
(P) 307/745.7474 (F) 307/745.7729

ADIT AND STOPE METAL GRATE CLOSURE AND SUMMARY TABLE

BOSTON HILL MINE SAFEGUARD PROJECT (PHASE I)
NEW MEXICO ABANDONED LAND MINE PROGRAM
SILVER CITY, NEW MEXICO

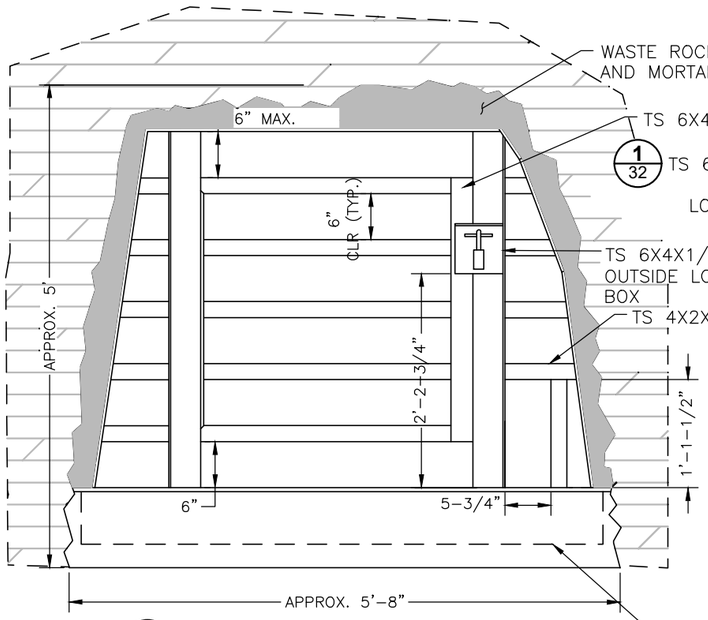

1 **ELEVATION - OUTSIDE LOOKING IN**
SCALE: NONE

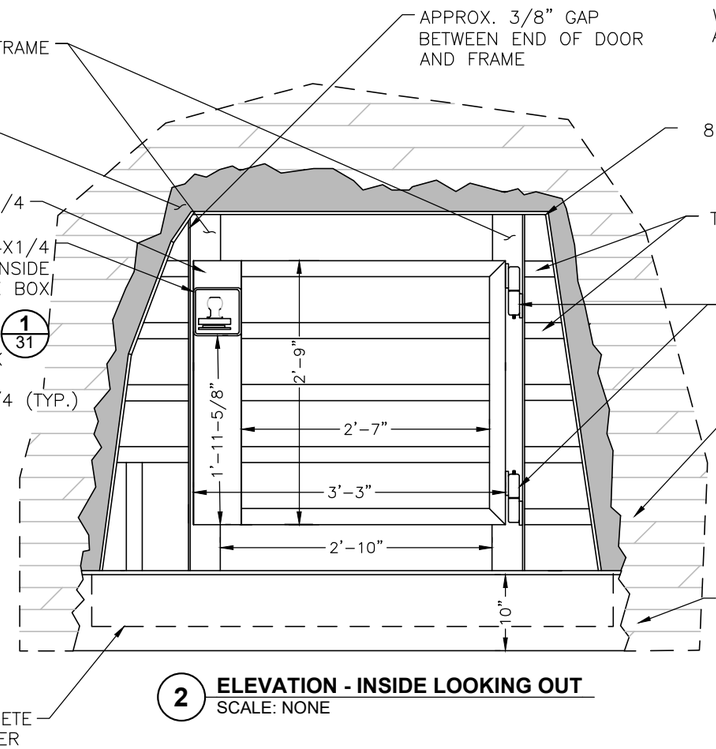

2 **ELEVATION - INSIDE LOOKING OUT**
SCALE: NONE

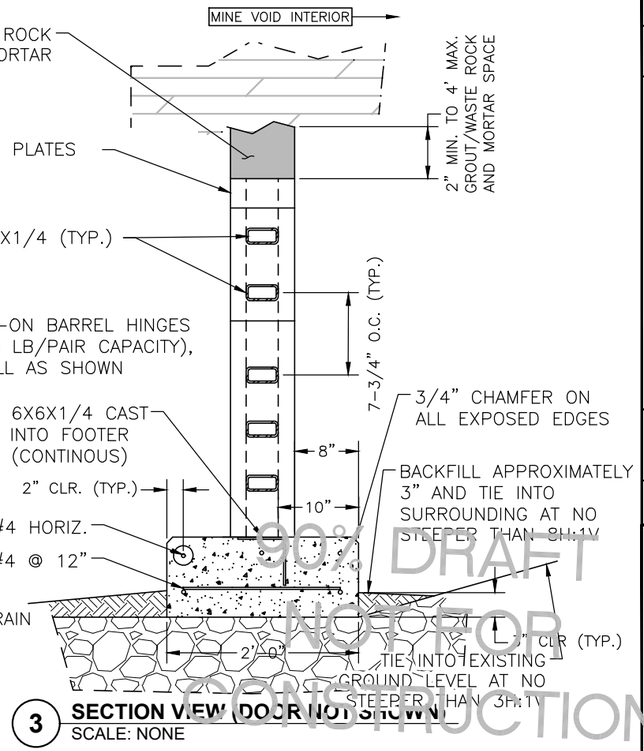

3 **SECTION VIEW (DOOR NOT SHOWN)**
SCALE: NONE

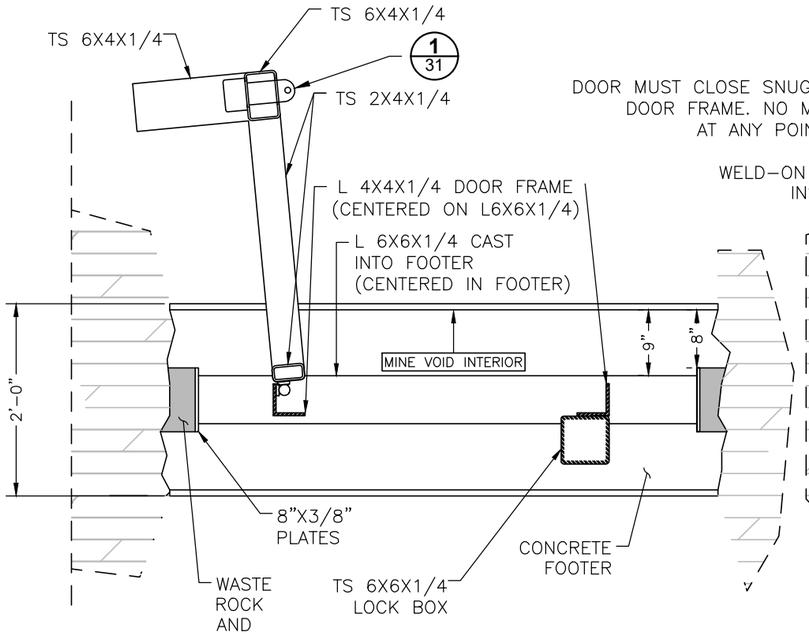

4 **PLAN VIEW - DOOR OPEN**
SCALE: NONE

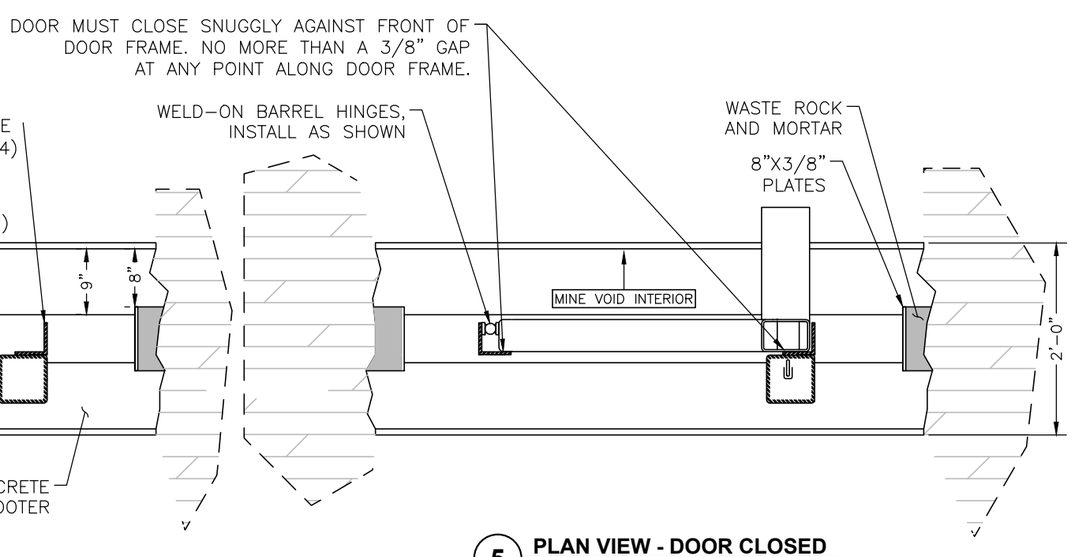

5 **PLAN VIEW - DOOR CLOSED**
SCALE: NONE

NOTES:

1. THIS DRAWING SHOWS THE GENERAL SHAPE AND APPROXIMATE PROFILE OF THE ADIT AT THE INTENDED LOCATION OF THE CLOSURE. USE THE DRAWING AS A GUIDE FOR FIELD LAYOUT OF THE CLOSURE. FIELD VERIFY DIMENSIONS PRIOR TO FABRICATION.
2. TUBULAR STEEL, STEEL PLATES, AND SHAPES SHALL BE WEATHERING STEEL AS SPECIFIED. WELD ALL JOINTS. JOINTS SHALL BE TIGHT SO THAT MOISTURE CANNOT ENTER BETWEEN PLIES OF MATERIAL. ROUND OR CHAMFER ALL SHARP EDGES AND CORNERS.
3. PRIOR TO CONSTRUCTING THE FOOTER, REMOVE RUBBLE AND LEVEL THE FLOOR IN THE AREA OF THE CLOSURE AS SHOWN IN THE DRAWING AND AS DIRECTED BY THE PROJECT MANAGER. COMPACT THE FOOTER BASE TO THE SATISFACTION OF THE PROJECT MANAGER, PRIOR TO POURING CEMENT FOOTER.
4. INSTALL HEAVY DUTY BARREL WELD-ON PIVOT HINGES (1000 LB/PAIR CAPACITY) AS SHOWN AND AS SPECIFIED. BOTH HINGES SHALL BE INSTALLED TO SUPPORT THE DOOR AND SHALL BE IN-LINE AND OPERATE SMOOTHLY WHEN THE DOOR IS HUNG.
5. CONSTRUCT AND INSTALL THE DOOR AND THE DOOR FRAME TRUE, SQUARE AND PLUMB. THE DOOR SHALL CLOSE SNUGGLY AGAINST THE FRONT FACE OF THE DOOR FRAME WITH NO MORE THAN A 3/8" GAP AT ANY POINT ALONG THE FRONT FACE OF BOTH SIDES OF THE DOOR AND FRAME WHEN THE DOOR IS CLOSED.
6. GROUT/MORTAR SHALL BE CONSTRUCTION GRADE.
7. PLACE A 3/4" CHAMFER ON ALL EXPOSED EDGES OF CONCRETE FOOTER.
8. TOLERANCES ON THE CENTER-TO-CENTER DIMENSIONS BETWEEN POSTS SHALL BE ± 1/16".

Source: New Mexico Energy, Minerals, and Natural Resources Department, 2018

REV.	DATE	DESCRIPTION	BY	CHK'D
0	05/02/2022	PHASE I 90% DESIGN SUBMITTAL	JD	TH

REVISIONS

DRAWN BY: JD
CHECKED BY: TH
DATE: 05/02/2022
SCALE: NONE
FILE: 01A-BOSTON_DETAILS-4

Trihydro CORPORATION
1252 Commerce Drive
Laramie, Wyoming 82070
www.trihydro.com
(P) 307/745.7474 (F) 307/745.7729

EGRESS ADIT CLOSURE DETAIL

BOSTON HILL MINE SAFEGUARD PROJECT (PHASE I)
NEW MEXICO ABANDONDED LAND MINE PROGRAM
SILVER CITY, NEW MEXICO

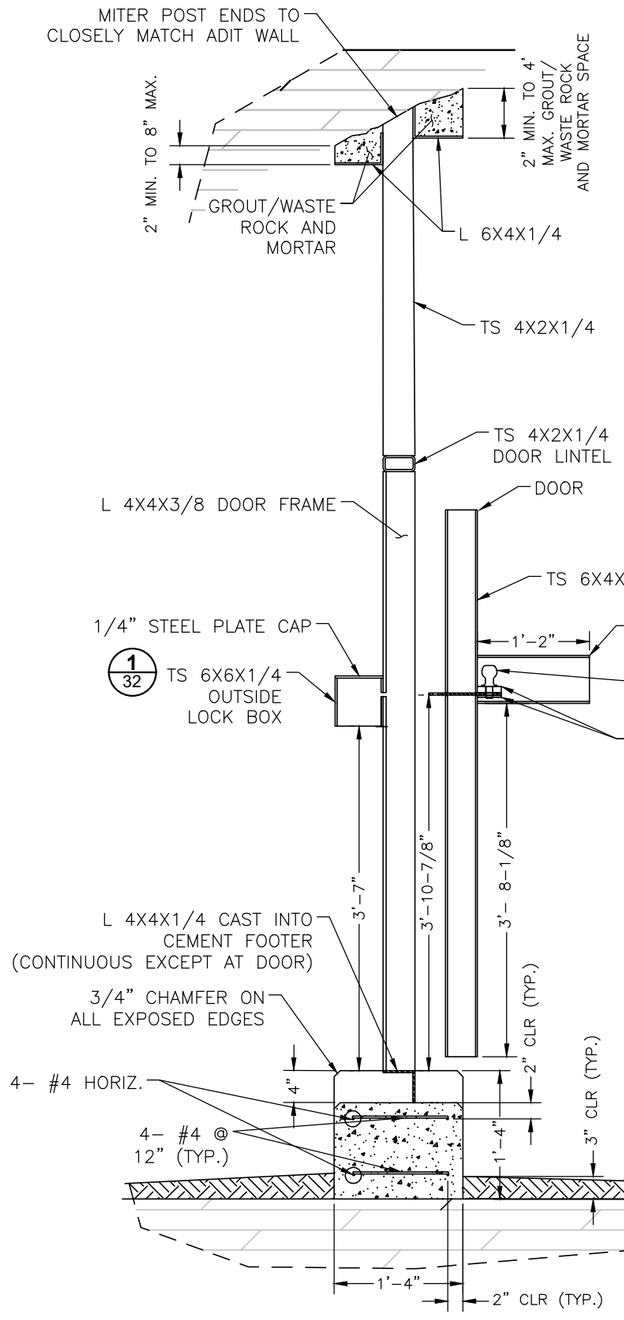

1 DOOR SECTION - DOOR SLIGHTLY OPEN
SCALE: NONE

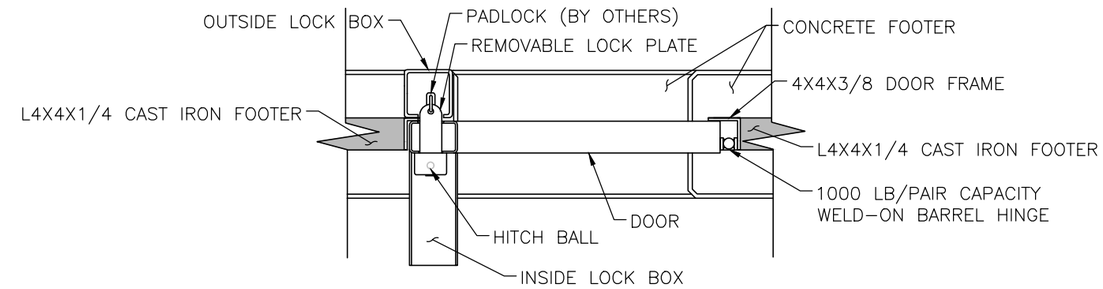

PLAN VIEW
DOOR CLOSED

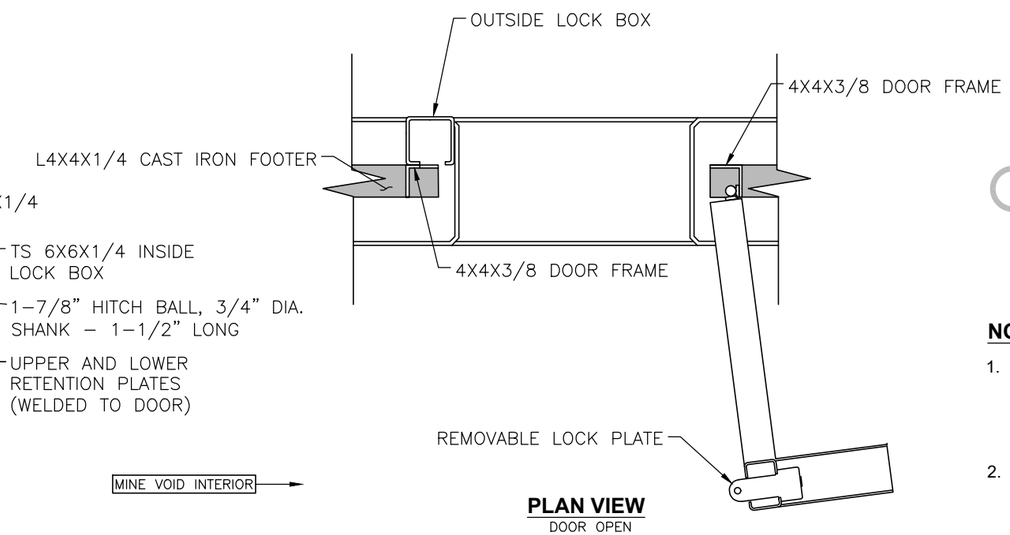

PLAN VIEW
DOOR OPEN

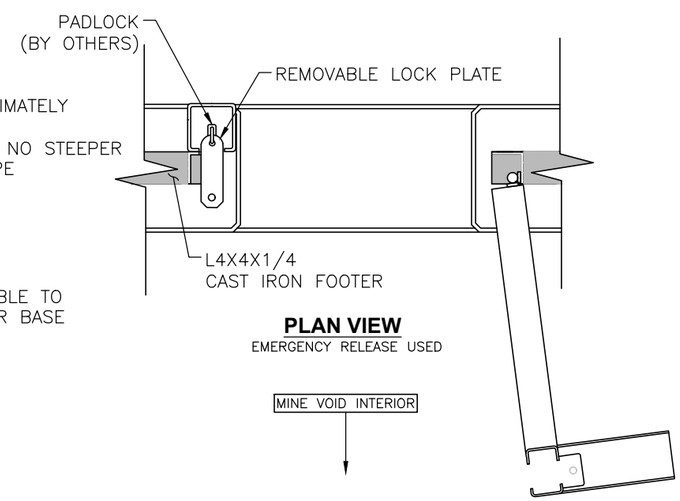

PLAN VIEW
EMERGENCY RELEASE USED

90% DRAFT NOT FOR CONSTRUCTION

NOTES:

1. TUBULAR STEEL, STEEL PLATES, AND SHAPES SHALL BE WEATHERING STEEL AS SPECIFIED. WELD ALL JOINTS. JOINTS SHALL BE TIGHT SO THAT MOISTURE CANNOT ENTER BETWEEN PLIES OF MATERIAL. ROUND OR CHAMFER ALL SHARP EDGES AND CORNERS.
2. THE INSIDE LOCK BOX INCORPORATES A 1-7/8" HITCH BALL WITH A 3/4" Ø SHANK CUT TO A 1-1/2" LENGTH. THE HITCH BALL MUST BE INSTALLED PRIOR TO WELDING THE INSIDE LOCK BOX ONTO THE DOOR. THE INSIDE LOCK BOX SHALL BE CONSTRUCTED SO THAT RAISING THE HITCH BALL WILL RELEASE THE REMOVABLE LOCK PLATE BUT NOT ALLOW REMOVAL OF THE HITCH BALL. THIS MECHANISM WILL ACT AS AN EMERGENCY LOCK RELEASE IN THE EVENT THAT SOMEONE IS TRAPPED BEHIND THE LOCKED DOOR. (**NOTE:** THE UPPER AND LOWER RETENTION PLATES ARE **NOT THREADED**. THE UPPER AND LOWER RETENTION PLATES SHALL BE DRILLED WITH A 7/8" Ø HOLE WHICH SHALL ALLOW THE HITCH BALL TO FREELY MOVE UP AND DOWN.)
3. CONSTRUCT THE LOCKING MECHANISM SO THAT THE EXPOSED EDGES OF ALL PARTS ARE CHAMFERED AND OPERATE SMOOTHLY WITHOUT BINDING. WHEN CLOSING THE DOOR, THE REMOVABLE LOCK PLATE SHALL ENTER THE SLOT IN THE OUTSIDE LOCK BOX WITHOUT HITTING OR RUBBING THE EDGES OF THE SLOT.
4. INSTALL HEAVY DUTY BARREL WELD-ON PIVOT HINGES AS SHOWN AND AS SPECIFIED. BOTH HINGES SHALL BE INSTALLED TO SUPPORT THE DOOR AND SHALL BE IN-LINE AND OPERATE SMOOTHLY WHEN THE DOOR IS HUNG.
5. THE DOOR AND DOOR FRAME SHALL BE CONSTRUCTED AND INSTALLED TRUE, SQUARE AND PLUMB. THE DOOR SHALL CLOSE SNUGGLY AGAINST THE FRONT FACE OF THE DOOR FRAME WITH NO MORE THAN A 3/8" GAP AT ANY POINT ALONG THE FRONT FACE OF BOTH SIDES OF THE DOOR AND FRAME WHEN THE DOOR IS CLOSED.
6. GROUT/MORTAR SHALL BE CONSTRUCTION GRADE.
7. PLACE A 3/4" CHAMFER ON ALL EXPOSED EDGES OF CONCRETE FOOTER.

Source: New Mexico Energy, Minerals, and Natural Resources Department, 2018

REV.	DATE	DESCRIPTION	BY	CHK'D
0	05/02/2022	PHASE I 90% DESIGN SUBMITTAL	JD	TH

REVISIONS

DRAWN BY: JD
CHECKED BY: TH
DATE: 05/02/2022
SCALE: NONE
FILE: 01A-BOSTON_DETAILS-4

Trihydro
1252 Commerce Drive
Laramie, Wyoming 82070
www.trihydro.com
(P) 307/745.7474 (F) 307/745.7729

EGRESS CLOSURE DOOR AND LOCK DETAIL

BOSTON HILL MINE SAFEGUARD PROJECT (PHASE I)
NEW MEXICO ABANDONED LAND MINE PROGRAM
SILVER CITY, NEW MEXICO

SHEET **31** 31 OF 33

REV: **0**

L:\NEW MEXICO - AML - DOCUMENTS\BOSTONHILL\CADD\PLANSET\01A-BOSTON_DETAILS-4

EGRESS ADIT CLOSURE SUMMARY TABLE

FEATURE		#		FT		SF		LFT	CY	
TRIHYDRO ID	OKUN ID	SHEET	GATES	OPENING WIDTH	OPENING HEIGHT	MASONRY AREA	GATE AREA	PLATE	CONCRETE FOOTER	ADDITIONAL NOTES
LT-7	2121	7	1	8	9	43	29	16	0.37	SEE DETAIL FOR LATCHING HARDWARE & CLOSURE ANGLES
LT-19		9	1	8.5	8.5	43	29	16	0.37	SEE DETAIL FOR LATCHING HARDWARE & CLOSURE ANGLES

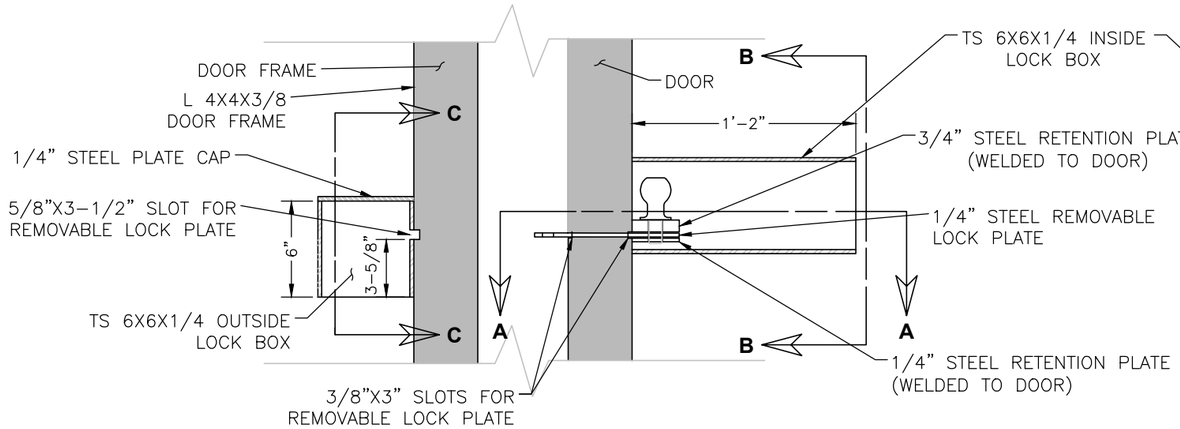

VERTICAL DOOR SECTION
DOOR SLIGHTLY OPEN

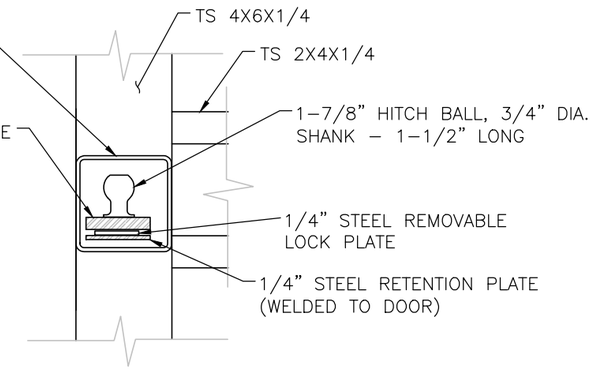

SECTION B-B

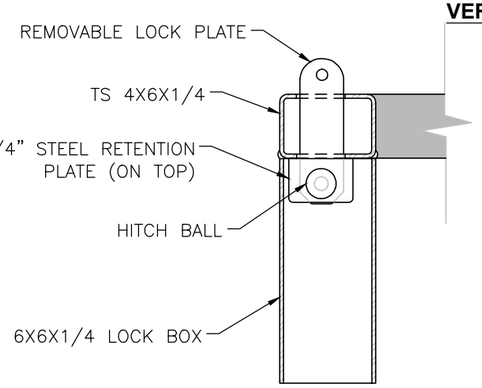

SECTION A-A

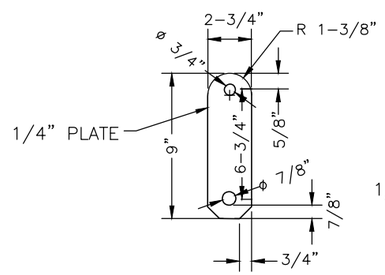

REMOVABLE LOCK PLATE
1/4" STEEL PLATE

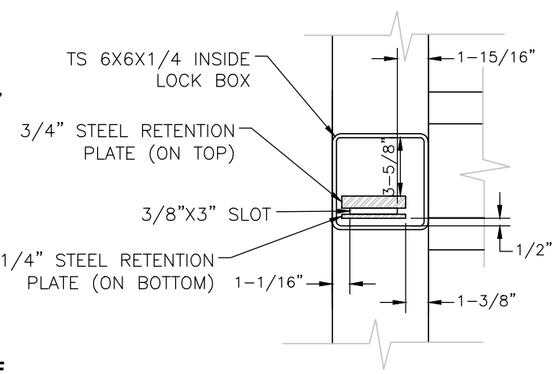

SECTION B-B
WITH HITCH BALL AND REMOVABLE LOCK PLATE NOT SHOWN

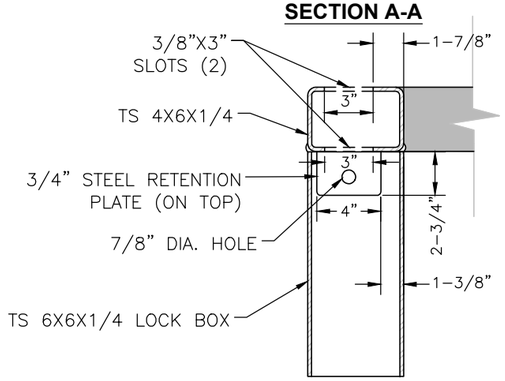

SECTION A-A
WITH HITCH BALL AND REMOVABLE LOCK PLATE NOT SHOWN

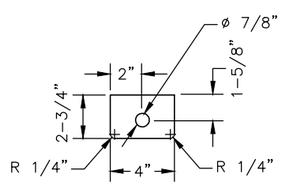

RETENTION PLATE DETAIL
TWO REQUIRED - ONE 3/4" PLATE AND ONE 1/4" PLATE

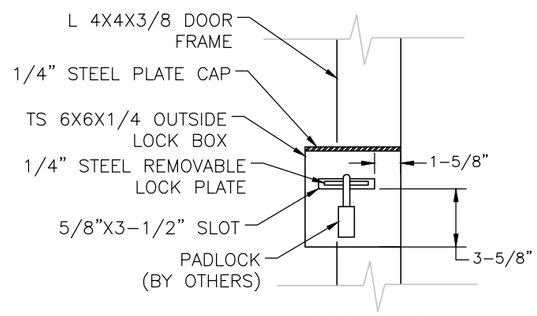

SECTION C-C
WITH PADLOCK INSTALLED

1 **LOCK BOX DETAILS**
SCALE: NONE

NOTES:

1. TUBULAR STEEL, STEEL PLATES, AND SHAPES SHALL BE WEATHERING STEEL AS SPECIFIED. WELD ALL JOINTS. JOINTS SHALL BE TIGHT SO THAT MOISTURE CANNOT ENTER BETWEEN PLIES OF MATERIAL. ROUND OR CHAMFER ALL SHARP EDGES AND CORNERS.
2. THE INSIDE LOCK BOX INCORPORATES A 1-7/8" HITCH BALL WITH A 3/4" Ø SHANK CUT TO A 1-1/2" LENGTH. THE HITCH BALL MUST BE INSTALLED PRIOR TO WELDING THE INSIDE LOCK BOX ONTO THE DOOR. THE INSIDE LOCK BOX SHALL BE CONSTRUCTED SO THAT RAISING THE HITCH BALL WILL RELEASE THE REMOVABLE LOCK PLATE BUT NOT ALLOW REMOVAL OF THE HITCH BALL. THIS MECHANISM WILL ACT AS AN EMERGENCY LOCK RELEASE IN THE EVENT THAT SOMEONE IS TRAPPED BEHIND THE LOCKED DOOR. (**NOTE:** THE UPPER AND LOWER RETENTION PLATES ARE **NOT THREADED**. THE UPPER AND LOWER RETENTION PLATES SHALL BE DRILLED WITH A 7/8" Ø HOLE WHICH SHALL ALLOW THE HITCH BALL TO FREELY MOVE UP AND DOWN.)
3. CONSTRUCT THE LOCKING MECHANISM SO THAT THE EXPOSED EDGES OF ALL PARTS ARE CHAMFERED AND OPERATE SMOOTHLY WITHOUT BINDING. WHEN CLOSING THE DOOR, THE REMOVABLE LOCK PLATE SHALL ENTER THE SLOT IN THE OUTSIDE LOCK BOX WITHOUT HITTING OR RUBBING THE EDGES OF THE SLOT.

Source: New Mexico Energy, Minerals, and Natural Resources Department, 2018

REV.	DATE	DESCRIPTION	BY	CHK'D
0	05/02/2022	PHASE I 90% DESIGN SUBMITTAL	JD	TH

REVISIONS

DRAWN BY: JD
CHECKED BY: TH
DATE: 05/02/2022
SCALE: NONE
FILE: 01A-BOSTON_DETAILS-4

Trihydro
1252 Commerce Drive
Laramie, Wyoming 82070
www.trihydro.com
(P) 307/745.7474 (F) 307/745.7729

EGRESS CLOSURE LOCK BOX DETAIL AND SUMMARY TABLE

BOSTON HILL MINE SAFEGUARD PROJECT (PHASE I)
NEW MEXICO ABANDONED LAND MINE PROGRAM
SILVER CITY, NEW MEXICO

REV: 0

L:\NEW MEXICO - AML - DOCUMENTS\BOSTONHILL\CADD\PLANSET\01A-BOSTON_DETAILS-4

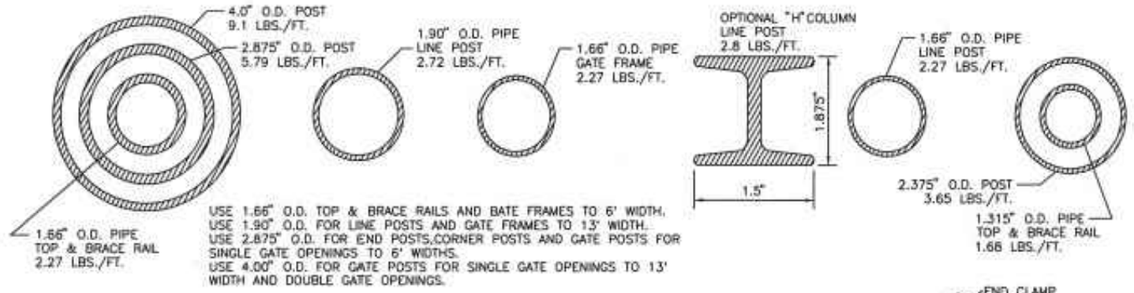

GENERAL NOTES

1. TUBLAR POSTS, BRACES AND TOP RAILS SHALL CONFORM TO THE REQUIREMENTS OF ASTM DESIGNATION F 1083.
2. CHAIN LINK FABRIC SHALL CONFORM TO AASHTO DESIGNATION M-181.
3. ALL CONCRETE TO BE CLASS "A".
4. KNUCKLED SALVAGE SHALL BE USED.
5. DIAMETER (O.D.) SHOWN HEREON ARE NOMINAL SIZES AS ESTABLISHED BY THE AMERICAN STANDARDS ASSOCIATION.

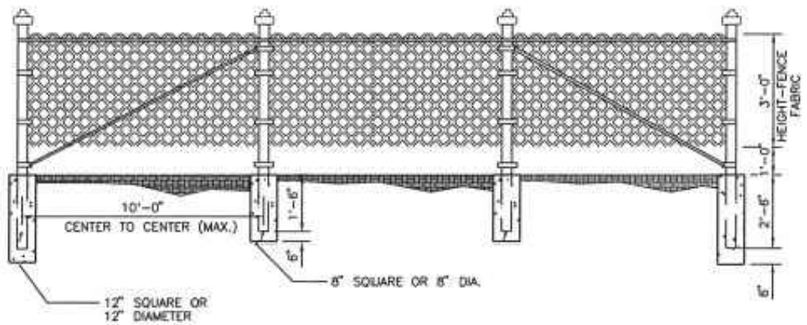

CHAIN LINK 4' ACCESS CONTROL FENCE

TOP RAIL USE 1.315" O.D.
FOR LINE POSTS USE 1.66" O.D.
FOR END POSTS USE 2.375" O.D.

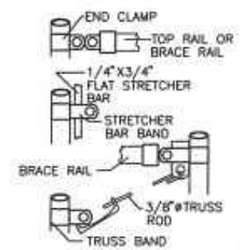

END AND GATE POST CONNECTIONS

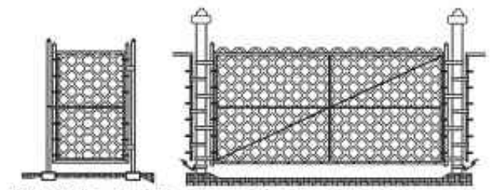

SINGLE GATE
(WALK GATE)

SINGLE GATE
WITH OFFSET 180° HINGES
(DRIVE GATE)

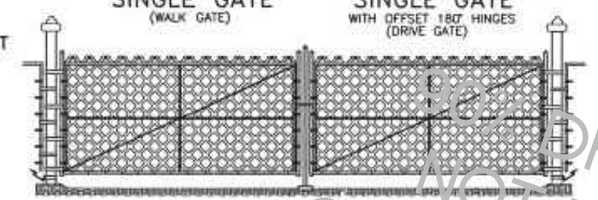

DOUBLE GATE
WITH OFFSET 180° HINGES
(DRIVE GATE)

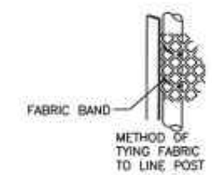

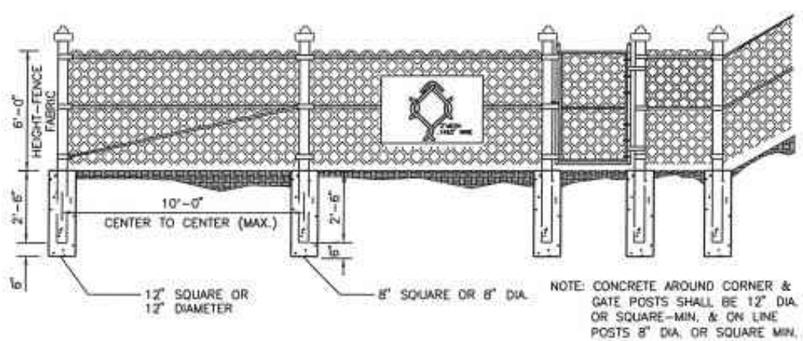

6' CHAIN LINK FENCE WITH GATE

FITTED GATE CORNER

WELDED GATE CORNER

OPTIONAL GATE CORNER TYPES

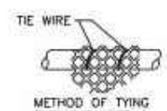

METHOD OF TYING FABRIC TO TOP & BRACE RAILS AND LINE POSTS

NO.	DATE	REV. BY	DESCRIPTION

REVISIONS (OR CHANGE NOTICES)

NEW MEXICO
DEPARTMENT OF TRANSPORTATION
STANDARD DRAWING

STANDARD CHAIN LINK
FENCES AND GATES

APPROVED DESIGN ENGINEER 11/29/04 DATE

DESIGNED BY___ DRAWN BY ___ CHECKED BY ___

607-04-1/1 SHEET 1 OF 1

CHAIN LINK FENCE REPAIR SUMMARY

FEATURE		#	FT		
TRIHYDRO ID	OKUN ID	SHEET	WIDTH	HEIGHT	ADDITIONAL NOTES
BH-1		6	20		INSTALL CROSS BAR SUPPORTS
BH-3		6	3	3	INSTALL CHAIN LINK FENCE PATCH
BH-5		6	10	6	INSTALL CHAIN LINK FENCE PATCH
BH-9		6	5	5	INSTALL CHAIN LINK FENCE PATCH
BH-10		6	10	6	INSTALL COMPLETE 10FT X 6FT PANEL
	2094	6	3	2	INSTALL CHAIN LINK FENCE PATCH

Source: New Mexico Department of Transportation, 2019

REV.	DATE	DESCRIPTION	BY	CHK'D
0	05/02/2022	PHASE I 90% DESIGN SUBMITTAL	JD	TH

REVISIONS

DRAWN BY: JD
CHECKED BY: TH
DATE: 05/02/2022
SCALE: NONE
FILE: 01A-BOSTON_DETAILS-4

Trihydro
1252 Commerce Drive
Laramie, Wyoming 82070
www.trihydro.com
(P) 307/745.7474 (F) 307/745.7729

CHAIN LINK FENCE AND GATE DETAIL AND SUMMARY TABLE

BOSTON HILL MINE SAFEGUARD PROJECT (PHASE I)
NEW MEXICO ABANDONDED LAND MINE PROGRAM
SILVER CITY, NEW MEXICO