From:	John Smitherman
To:	WasteRule, EMNRD, EMNRD
Cc:	John Smitherman
Subject:	[EXT] Comments to draft rule
Date:	Wednesday, September 16, 2020 4:55:36 PM
Attachments:	NMOGA OCD Comments_v0.pdf

New Mexico Oil Conservation Division
Attention: Tiffany Polak, Deputy Director

Dear Ms. Polak,

On behalf of the New Mexico Oil and Gas Association, we offer the attached comments for the proposed Waste (Venting and Flaring) Rule. NMOGA and its member companies appreciate this opportunity to work with the Division towards our common goals.

Please do not hesitate to reach out if you have questions on these comments or want to meet for a broader discussion.

Would you be so kind as to acknowledge receipt of this message via email reply?

Thank you,

John R. Smitherman
Senior Advisor – Petroleum Engineer
New Mexico Oil and Gas Association

NEW MEXICO OIL AND GAS ASSOCIATION

P.O. Box 1864, Santa Fe, New Mexico 87505

September 16, 2020

Adrienne Sandoval, Oil Conservation Division Director
New Mexico Energy, Minerals and Natural Resources Department
1220 S. St. Francis Drive
Santa Fe, New Mexico 87505
Via email: EMNRD.WasteRule@state.nm.us

Director Sandoval,

The New Mexico Oil & Gas Association (NMOGA) is a coalition of more than 1,000 oil and natural gas companies and individuals operating in the state of New Mexico. NMOGA members include all facets of oil and gas production, transportation, and delivery, and is the oldest and largest organization representing the oil and gas industry in New Mexico. Oil and gas is the greatest economic contributor to the state of New Mexico, supporting more than 134,000 jobs and $17 billion in annual economic activity. In addition, taxes and royalty from the oil and gas industry account for 39% of the State of New Mexico's annual budget, including over $1.4 billion for public schools.

NMOGA appreciates the opportunity to provide comment on the Oil Conservations Division's (OCD) draft regulation published on July 20, 2020. We value the fact that OCD has dedicated significant time towards developing the regulation. In line with the objectives outlined in the Governor's 2019 Executive Order, members of NMOGA have undertaken a proactive approach to reduce methane emissions and flaring with the goal of capturing as much natural gas as feasible. Using science, innovation, and collaboration, New Mexico operators have worked, and continue to work to prevent waste of natural resources, reduce emissions, and improve air quality, all while growing production, creating jobs for New Mexicans, and providing revenues for the state. As the chart below illustrates, industry efforts have reduced methane emissions by over 50% even as oil and gas production has increased by approximately 70%.

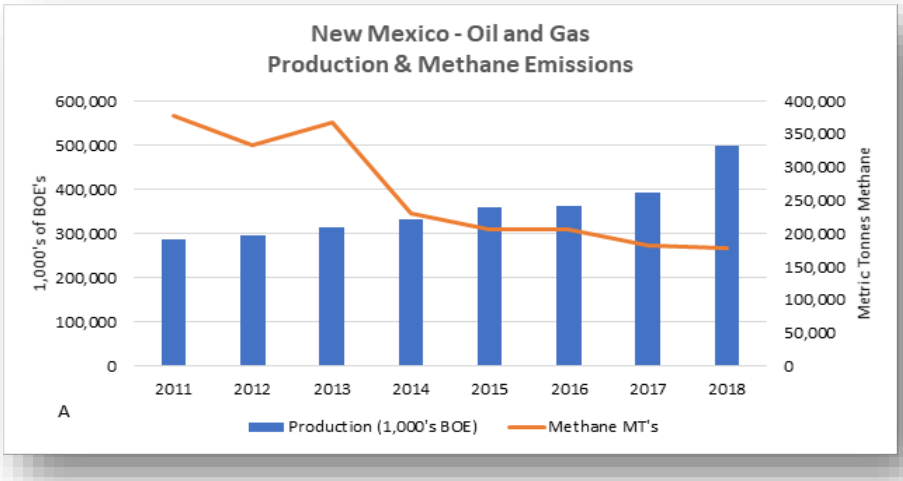

NMOGA supports a practical, cost-effective methane emission and flaring reduction strategy. We commend your agency and the members of the Methane Advisory Panel (MAP) for dedicating significant time and resources to developing a technical background document on oil and gas sources of methane. The paths forward in the MAP paper contain many more worthy suggestions, as well as best operating and design practices, than we see integrated into the OCD's draft regulation. For example, during the MAP sessions, much consideration was given on the limitations to accurate measurement of low-pressure sources. This is an important factor in the NMOCD's rule applicable to the numerical gas capture requirements. High pressure measurement has greater accuracy and tremendous opportunities for overall flare reductions. Further, the MAP looked at the practices, as well as complexities, associated with infrastructure planning. These suggestions create a more fulsome picture of the challenges in gas management planning and development of regulatory objectives.

NMOGA supports the consideration of a performance-based approach and supports the 2026 goal of achieving 98% capture. The most efficient way to achieve our shared goal of managing waste from flaring is to set a target and let the engineers, commercial teams, and other experts find the best way for each company to get there. Regrettably, the draft regulation undermines the strengths of the performance-based approach by including overly specific requirements. These specific requirements limit the ways which operators may achieve the performance-based standard as well as raising operators' costs significantly. This undercuts the value of the standard itself.

In practice, highly trained engineers work closely in reservoir engineering and operations teams to look for and create optimum design solutions that are practical, cost-effective and scientifically-sound for each production site, while being mindful of each site's differences. Many times, these teams use different designs and technologies to reach common goals depending on circumstances. Mandating very specific engineering solutions, instead of establishing performance-based standards, will almost certainly result in unintended consequences. Prescriptive regulations limit engineers' opportunities to adopt new technologies or tailor appropriate approaches for a site. We encourage OCD to carefully consider the balance between prescriptive measures and flexibility to innovate in order to allow operators to appropriately deploy best practices depending on current circumstances and to allow for best practices to evolve with the availability of new technology.

Further, ineffective, burdensome reporting requirements limit flexibility and distract from efforts to meet those performance-based standards while simultaneously overwhelming the agency's staff resources, without added value. The benefits of establishing clear, reasonable, performance-based standards will encourage individual companies to collect the relevant information they need to identify and prioritize areas where improvements can be made so that emissions of methane and the flaring of natural gas can be most effectively reduced. Overly burdensome requirements proposed in the draft rule distract from and/or fail to add value to stakeholders' collective goal to develop a common sense and effective approach in reducing emissions and flaring. NMOGA will offer alternatives that seek to provide OCD with the information they need to properly oversee oil and gas operations without overwhelming both operators and the agency itself with overly burdensome paperwork. That way agency and industry resources can focus on improved performance.

The suggestions offered by NMOGA should help the industry meet the performance-based standards and give OCD the information it needs at a greatly reduced cost impact. The economic impacts of this rule combined, with the rule proposed by NMED, are substantial at $4.017 billion, as projected in a report by the economist firm of John Dunham and Associates that is made part of this comment package.

NMOGA remains committed to working with OCD to create regulations that are effective in achieving real improvement in reducing methane emissions and flaring. We support achieving that goal through the establishment of clear, reasonable, performance-based standards and rules that allow operators flexibility in reaching those goals and reporting requirements that are effective but not overly burdensome. Throughout this comment package, you will find recommendations which are intended to reduce barriers to adopting new solutions, including technologies that exist today, and those that may be available in the future so that we can reach our shared goals of valuable development in New Mexico and reduced waste of natural gas.

We look forward to continuing the discussion with you and your team.

Sincerely,
Ryan Flynn
Executive Director
New Mexico Oil & Gas Association

SECTION 1

The Draft Rules Conflict with the Statutory Concept of "Waste" and Improperly Seek to Regulate Activities Addressed by Other State and Federal Agencies.

Independent of language changes to clarify and improve the effectiveness of the proposed rules, NMOGA notes that the predicate statements in Parts 27.8.A and 28.22.A are contrary to the definition of "waste" in Section 70-2-3 of the Oil & Gas Act and NMAC 19.15.2.7. This definition has governed the primary role and jurisdiction of the Oil Conservation Commission since the enactment of the Act. NMOGA is concerned that the effort in Parts 27 and Parts 28 to redefine "waste" has resulted in proposed rules that do not recognize that flaring and venting which is necessary, not excessive or which constitutes a beneficial use in the production of oil and gas is not "waste" and therefore authorized by the Oil and Gas Act. Prior Commissions have clearly recognized this statutory directive, enacting rules confirming that flaring and venting is generally necessary and appropriate until a well has been drilled and completed. See, e.g., NMAC 19.15.18.12.A ("an operator shall not flare or vent casinghead gas produced from a well after 60 days following the well's completion."); NMAC 19.15.19.10 (prohibiting venting "after the completion of a gas well").

Oil and gas producers in New Mexico are already subject to existing stringent air emissions standards and work practices established in federal rules and in state issued air permits. As noted in Appendix A, the proposed rule unnecessarily and substantially overlaps various NMED rules, creating areas of inconsistency with existing NMED requirements. This creates confusion and, unlike the existing NMED rules, the Division's proposed overlapping restrictions are not based on any cost-benefit analysis. The Division should remove all provisions in the proposed rule that overlap and impose new requirements on federal and state regulated sources.

Finally, the Commission has been constituted under the Oil & Gas Act for over 80 years. This body has never enacted regulations, or sought to enact regulations, seeking to define and regulate intrastate or interstate gathering systems. All prior Commissions have recognized that no such authority exists in the Oil & Gas Act because the regulation of gathering lines in New Mexico rests with other state and federal agencies, including the Pipeline and Hazardous Materials Safety Administration under the Federal Pipeline Safety Act and the New Mexico Public Regulatory Commission under the State Pipeline Safety Act. The Commission has recognized for over 80 years that regulations such as those proposed in Part 28 unlawfully overlap, conflict with and are precluded by existing state and federal authorities. Accordingly, the Division has never been staffed with the expertise and employees necessary to extend the OCC's authority to gathering lines. NMOGA therefore questions the inclusion of Part 28, but as a valued partner in crafting effective, practical rules, has offered comments on this section to improve them should they remain as proposed rules.

SECTION 2

Several Definitions in the Draft Rule Should be Modified or Added to Provide Clarity or Consistency with existing related state and federal regulations

It is important to maintain consistency in the definitions in Part 27 and Part 28, and whenever possible to maintain consistency between these proposed rules and the definitions utilized by the NMED, BLM, and EPA. To provide that clarity and consistency, NMOGA suggests the following changes and additions to the definitions set forth in Parts 27 and 28. References to the particular subsections in Part 27.7 and 28.7 have been removed to avoid duplicative changes and the definitions have been placed in alphabetical order for easier reference.

"ALARM" *means advanced leak and repair monitoring designed to detect and identify natural gas emissions.*

"**Completion operations**" means the period that begins with the initial perforation of the well in the completed interval and concludes upon startup of production. ~~on the earlier of 30 days after commencement of initial flowback or when permanent production equipment is in use at the well.~~

"Emergency" *means a temporary, infrequent and unavoidable event in which the loss of natural gas is uncontrollable or necessary to avoid a risk of an immediate and ~~substantial~~ adverse impact on safety, public health or the environment. An emergency does not include an event arising from or related to*:

(1) *the operator's failure to install appropriate equipment of sufficient capacity to accommodate the anticipated or actual rate and pressure of production;*

(2) *the operator's failure to limit production from a gas well[1] or limit gathering when the production rate exceeds the capacity of the related equipment or natural gas gathering system as defined in 19.15.28 NMAC, or exceeds the sales contract volume of natural gas;*

(3) *scheduled maintenance;*

(4) *the operator's negligence, including a recurring equipment failure;*

or

(5) ~~*Two or more emergencies experienced by the operator within the preceding 60 days, unless the division determines the operator could not have reasonably anticipated the current event and it was beyond the operator's control*~~*.*[2]

"Flare stack" *means an appropriately engineered ~~designed~~ stack ~~equipped with a burner~~ used for the combustion and disposal of natural gas.*

---

[1] This conforms with the definition of waste in Section 70-2-4.E of the Oil & Gas Act.

[2] "Negligence" and "reoccurring equipment failure" are already addressed in subparagraph (4). The provision in subparagraph (5) is arbitrary, duplicative and unnecessarily impinge on necessary flaring or venting during emergency events.

"Natural gas gathering system" *means the gathering pipelines and associated facilities that compress, dehydrate or treat natural gas from the production operations outlet custody transfer point*[3] *to the connection point with a natural gas processing plant or transmission or distribution system.*

"New Gathering Pipeline" *means a gathering pipeline installed after {effective date}, but does not include repaired or replaced segments in existing gathering pipelines constructed prior to the effective date of the rule.*[4]

"Initial flowback" *means the period during a well completion operation which begins at the onset of flowback and ends at the separation flowback stage.*[5] *the period during completion operations that begins with the onset of flowback and concludes when it is technically feasible for a separator to function.*

"Malfunction" *means any sudden, and unavoidable failure of air pollution control equipment or process equipment beyond the control of the owner or operator, including malfunction during startup or shutdown. A failure that is caused entirely or in part by poor maintenance, careless operation, or any other preventable equipment breakdown shall not be considered a malfunction.* ***"Malfunction"*** *means a sudden, unavoidable failure or breakdown of equipment beyond the reasonable control of the operator that substantially disrupts operations and requires correction, but does not include a failure or breakdown that is caused entirely or in part by poor maintenance, careless operation or other preventable equipment failure or breakdown.*

"Production Operations"[6] means activities and permanent equipment necessary for the production of oil and gas, starting with the wellhead and extending through the outlets of production facility or facilities (also known as a production battery or a tank battery) serving one or more wells, including a tank outlet for trucked oil, the lease automatic custody transfer unit for oil allocation or sale, and the gas outlet(s) for gas allocation or sale as appropriate. Production operations begin on the earlier of 31 days following the commencement of initial flowback or upon the startup of production when permanent production equipment is in use for a well or wells and concludes when production ceases and wells are plugged and abandoned. ***Production operations"*** *means the period of operation after drilling operations and completions operations (as defined and ends when the well ceases to produce the period that begins on the earlier of 31 days following the commencement of initial flowback or when permanent production equipment is in use at a well and concludes when the well is plugged and abandoned.*

"Separation flowback" *means the period during a well completion operation when it is technically feasible for a separator to function. The separation flowback stage ends either at the startup of production, or when the well is shut in and permanently disconnected from the flowback equipment.*[7] *the period during completion operations that begins when it is technically feasible for a separator to function and concludes on the earlier of 30 days after initial flowback begins or when permanent production equipment is in use at the well or production facility.*

---

[3] Conforms with the corresponding change to "production operations" to clarify when gathering begins.
[4] Added for clarity
[5] Based on 40 CFR 60 subpart OOOO/OOOOa
[6] This change is based on NMTRD definition of production unit in NMAC 3.18.1.7 to more clearly define what is understood as production operations.
[7] Based on 40 CFR 60 subpart OOOO/OOOOa.

NEW **"Startup of production"** *means the beginning of initial flow following the end of flowback when there is continuous recovery of salable quality gas and separation and recovery of any crude oil, condensate or produced water.*[8]

[8] Based on 40 CFR 60 subpart OOOO/OOOOa.

SECTION 3
Provisions Addressing Venting and Flaring During Drilling, Completion, Production and Gathering Operations

The Commission has always recognized that flaring and venting during drilling and completions operations are necessities and therefore not a "waste" under the Oil & Gas Act. NMOGA recommends the following changes to remain consistent with that statutory directive, to promote the capture or flaring of natural gas when feasible during these operations and to avoid inconsistency with existing regulations and standards.

A. The General Provision

MODIFY 27.8.A: ~~*Venting and flaring of natural gas during drilling, completion or production operations constitutes waste and is prohibited except as authorized below*~~*. An operator has a general duty to avoid the unnecessary or excessive loss* ~~*maximize the recovery*~~ *of natural gas* ~~*and to minimize the release of natural gas*~~ ~~*to the atmosphere*~~ *during drilling, completion and production operations.*

Justification: The definition of "waste" in Section 70-2-3 and NMRA 19.15.2.7.

B. Comments on Venting and Flaring During Drilling Operations [Part 27.8.B]

MODIFY 27.8.B(1): ~~*The operator shall capture or combust natural gas escaping from the well using best available control technologies.*~~*" Operators shall capture or combust natural gas escaping from the well when safe and practical to do so.*

Justification: While NMOGA supports capturing or combusting as much natural gas escaping from a well during the drilling phase as possible, certain exceptions must be allowed in order to align the drilling contractor, typically an independent third party, with the operator while balancing workplace safety with emission reduction. A drilling rig has a drilling fluid circulating system that cannot be a closed system. Trying to close this system is inherently dangerous because that is not now drilling fluid (mud) losses can occur unexpectedly and would result in the introduction of air into such a closed system at the rig site. If natural gas had been captured in the closed system, the introduction of air could create an explosive mixture at the rig site. An exception should be made for any gas or VOCs that might be released out of the mud system when operating at atmospheric pressure on the surface. If drilling while circulating under surface pressure above atmospheric pressure, typically using a rotating blowout preventer or rotating head, the mud returns are routed through a mud/gas separator to break out natural gas brought to the surface and route it to a flare. NMOGA supports a requirement to combust this natural gas whenever safe and practical to do so. The volumes of gas that may be released during drilling are also comparatively insignificant.

The meaning of "best available control technologies" is undefined and is a term of art for air quality regulations. Unless the Division intends to adopt the NMED definition of "best available control technologies", this language should be deleted.

DELETE 27.8.B(2): ~~*A flare stack shall be located at a minimum of 100 feet from the nearest surface hole location and shall be enclosed and equipped with an automatic ignition system of continuous pilot."*~~

Justification: A flare stack during drilling operations is typically owned and/or controlled by the independent drilling contractor. Its placement is already dictated by safety requirements placed on that contractor. Further, the restriction of placing the stack a minimum of 100 feet from the nearest surface hole is overly restrictive as there may be instances when a surface hole is only a few feet deep with conductor pipe grouted in place, therefore representing no danger. Drill sites are manned at all times. There is no need to require auto-ignition or continuous pilots as contractors are expected to manage this flare stack in a manner consistent with safe operating practices. Enclosed flares do not help to reduce emissions and are not required for production operations. This part does not seek to reduce waste and should be removed to allow drilling contractors to manage drill site safety, to adhere to already established applicable work safety requirements and to avoid duplicative or overlapping regulatory requirements.

Please note that comments to **Part 27.8.B(3) (**Emergency and malfunction reporting) can be found under Section 6 below.

C. Comments on Venting and Flaring During Completion Operations [Part 27.8.C]

Part 27.8.C should be deleted in its entirety. Like drilling activities, the Commission has always recognized that flaring and venting during completions operations are necessities and therefore not a "waste" under the Oil & Gas Act. According to EPA's GHG reporting program the 2018 emissions reported for completions and workovers are a small fraction of the total onshore GHG emissions for each basin. Completions and workover emissions without hydraulic fracturing are an even smaller fraction of the total GHG emissions for the respective basins. In addition, regulations pursuant to 40 CFR 60 subpart OOOO/OOOOa apply to well completions with hydraulic fracturing. These regulations prescribe emission standards for this type of activity, have been established through a robust cost-benefit analysis during the EPA rulemaking process, and the industry has been complying with these provisions for several years. Since these limited emissions are adequately covered by the NSPS OOOO/OOOOa, additional requirements for this source are unnecessary and redundant.

D. Comments on Venting and Flaring During Production Operations [Part 27.8.D]

MODIFY 27.8.D(1): *After a period of 30 days after commencement of initial flowback, or* upon the startup of production when permanent production equipment is in use for a well or wells*, whichever is earlier, ~~T~~the operator shall not vent or flare natural gas except as authorized below in Subparagraph (2) of Subsection D of 19.15.27.8 NMAC.*

Justification: This conforms with the definitions of completion operations and production operations, and are needed to accommodate safety concerns presented by the unpredictable nature of production during flowback, production startup and gas gathering equipment start-up operations.

MODIFY 27.8.D (2): *The operator may vent or flare natural gas*

(a) to the extent authorized by ~~a valid federally enforceable air quality~~ limits in a permit, authorization or other requirement established by ~~issued by~~ a federal, state, local or tribal authority~~the environment department~~;

Justification: The term "federally enforceable" does not readily apply here and the Division must account for authorization by other agencies and means.

(b) during an emergency or malfunction~~, but only to avoid a risk of an immediate and substantial adverse impact on safety, public health or the environment;~~

Justification: Emergency and malfunction definitions already cover the risk and immediate harm. All flaring and venting during emergencies and malfunctions should be excepted, as well as flaring and venting due to a third party cause that the owner and operator cannot control. The proposed language provides simplification and clarity to the regulation.

(c) to unload or clean-up a well to atmospheric pressure,

(i) if the operator allows the well to vent only so long as necessary to achieve a stabilized rate, ~~and~~pressure and saleable quality;

Justification: Gas sent to atmospheric tanks has too much oxygen to send to gathering.

(ii) for liquids unloading by manual purging, when the operator remains in close proximity ~~present on-site~~ until the end of unloading, takes all reasonable actions to achieve a stabilized rate and pressure at the earliest practical time and takes all reasonable actions to minimize venting to the maximum extent practicable;

Justification: Consistency with the NMED liquids unloading provisions.

(iii) for a well equipped with a plunger lift system or an automated control system, when the operator optimizes the operation of the system to minimize the venting of natural gas; or

(*iv) during downhole well maintenance, if and only when the operator uses a workover rig, swabbing rig, coiled tubing unit or similar specialty equipment, and minimizes the venting of natural gas to the extent consistent with safe operation and best management practices; and*

(d) during the following activities~~ to the extent authorized by applicable state or federal law regulating the emission of hydrocarbons and volatile organic compounds~~:

Justification: The Division is not addressing air emission issues under state or federal law, but only the issue of waste. Some venting and flaring during production operations is necessary and to be expected for normal operations. Low pressure sources such as storage tanks or other low-pressure production vessels, the loading out of liquids from storage tanks or other low-pressure production vessels to a transport vehicle, and pneumatic controllers and pumps are directly regulated by NMED and should not be considered waste. In most cases, these sources are included as part of an air quality permit. It is unnecessary for the Division to specifically address every potential source of gas vented or flared during normal operations, all of which are already adequately regulated by state or federal rules and regulations. Accordingly, NMOGA suggests deleting subparagraphs (ii), (iv) and

(v), to be replaced with "operation of equipment." The remaining activities have been renumbered.

(i) gauging or sampling of a storage tank or other low-pressure production vessel;
(ii) operation of equipment ~~loading out liquids from a storage tank or other low-pressure production vessel to a transport vehicle~~;
(iii) ~~scheduled~~ repair and maintenance, including blowing down and depressurizing production equipment, gathering pipelines or compression systems to perform repair and maintenance;
(iv) a bradenhead test;
(v) a packer leakage test; or
(vi) a production test that does not exceed 24 hours unless the division requires or approves a longer test period.

Justification: To include any maintenance, including unscheduled and third-party maintenance.

DELETE 27.8.D(3): Monthly and weekly AVO inspections.

Justification: *See* Appendix A. These AVO inspection requirements overlap and are inconsistent with NSPS Ouad O/Oa for newer facilities, storage tanks and for all non-marginal facilities in NMED 20.2.50.16 Standards for Equipment Leaks proposed Ozone Precursors rules.

Part 27.8.D(4): (Reporting for venting and flaring): Please note that comments for these provisions are set forth in Section 6 below.

DELETE 27.8.D(5): Performance standards for separation, storage tank and flare equipment.

Justification: As noted in Appendix A, these provisions overlap and are inconsistent with NMED Ozone precursor provisions governing this equipment. *See. e.g., 20.2.50.15-19, 23.* These provisions are therefore unnecessary and will cause confusion.

NMOGA also notes that the automatic gauging system required in D(5)(b) is vague and not allowed by BLM rules. Some transporters still require manual tank gauging at the time of truck loading. There are currently over 29,000 active federal producing wells in New Mexico. Many of them supported by older facilities. Automatic tank gauging (ATG) weight was not part of original tank designs for older facilities. There is an additional complication of compatibility of tank hatches and ATGs. Retrofitting existing tanks on older facilities to accept an ATG is very difficult. Complying with this requirement would cause non-compliance with BLM requirements and change the economic viability of some existing facilities.

PART 27.8.E (measurement and reporting): Please note that comments for these provisions are set forth in Sections 5 and 6 below.

D. Venting and Flaring During Gathering Operations [Part 28.22].

MODIFY 19.15.28.22.A *~~Venting and flaring of natural gas from a natural gas gathering system constitutes waste and is prohibited except as authorized below in Subsection B of 19.15.28.22 NMAC.~~ An*

operator has a general duty to avoid unnecessary and excessive loss ~~maximize the gathering~~ of natural gas ~~and to minimize the release of natural gas to the atmosphere~~ during gathering operations.

Justification: The definition of "waste" in Section 70-2-3 and NMRA 19.15.2.7. Not all venting and flaring is a waste and it should not be characterized as such in this rule. For example, natural gas that is released to enable normal operation of a natural gas gathering system is not a waste, rather is required and therefore not a waste.

Modify 28.22.B:

B. An operator shall not vent or flare natural gas, except

(1) to the extent authorized by ~~a valid federally enforceable air quality~~ limits in a permit authorization or other requirement established by federal, state, local or tribal authority ~~issued by the environment department~~;

Justification: The term "federally enforceable" does not readily apply here and the Division must account for authorization by other agencies and means.

(2) during an emergency or malfunction, ~~but only to avoid a risk of an immediate and substantial adverse impact on safety, public health or the environment;~~

Justification: Emergency and malfunction definitions already cover the risk and immediate harm. All flaring and venting during emergencies and malfunctions should be excepted, as well as flaring and venting due to a third party cause that the owner and operator cannot control. The proposed language provides simplification and clarity to the regulation.

(3) during the following activities ~~to the extent authorized by applicable state and federal law regulating the emission of hydrocarbons and volatile organic compounds~~:

(a) repair and maintenance, including blowing down and depressurizing equipment or pigging to perform repair and maintenance;
(b) operation of equipment;
(c) gauging or sampling of storage tanks or other low-pressure vessels;
(d) loading out liquids from a storage tank or other low-pressure vessels to transport vehicles;
(e) purging a gathering pipeline; and
(f) commissioning of pipelines, equipment and facilities.
~~(a) scheduled repair and maintenance, including blowing down and depressurizing equipment to perform repair and maintenanes;(b) normal operation of a gas-activated pneumatic controller or pump;~~
~~(c) normal operation of a dehydration unit;~~
~~(d) normal operation of a compressor or compressor engine;~~
~~(e) normal operation of a storage tank or other low-pressure production vessel, but not including venting from a thief hatch that has not been fully and timely closed or from a seal that has not been maintained on an established schedule;~~
~~(f) gauging or sampling of storage tanks or other low-pressure vessels;~~
~~(g) loading out liquids from a storage tank or other low-pressure vessels to transport vehicles;~~
~~(h) a blowdown to repair a gathering pipeline;~~

~~*(i) pigging a gathering pipeline; and*~~
~~*(j) purging a gathering pipeline.*~~

Justification: The Division is not addressing air emission issues under state or federal law, but only the issue of waste. Some venting and flaring is necessary and to be expected for normal operations. These sources are included as part of an air quality permit. It is unnecessary for the Division to specifically address every potential source of gas vented or flared during normal operations, all of which are already adequately regulated by state or federal rules and regulations.

DELETE (4) ~~The operator shall conduct a weekly AVO inspection to confirm that all equipment is operating properly and there is no venting except as allowed in Subsection B of 19.15.28.22 NMAC~~

Justification: Weekly AVO inspections have an undefined scope and are not practical for remote, unmanned, and dispersed facilities or along gathering pipelines. AVOs at booster stations in the gathering system are covered by NMED LDAR requirements, making this requirement redundant for booster stations.

Section 4

Comments on Parts 28.8 through 28.21: ***Safety standards for the design, construction, testing, operation, maintenance, and integrity management of natural gas gathering lines.***

As noted in the introduction, NMOGA questions the inclusion of Part 28. All prior Commissions have recognized that the regulation of gathering lines in New Mexico rests with other state and federal agencies, including the Pipeline and Hazardous Materials Safety Administration under the Federal Pipeline Safety Act and the New Mexico Public Regulatory Commission under the State Pipeline Safety Act. The Commission has recognized for over 80 years that regulations such as those proposed in Part 28 unlawfully overlap, conflict with and are precluded by existing state and federal authorities. Accordingly, the Division is not currently staffed and has never been staffed with the expertise and employees necessary to extend its regulatory authority to gathering lines.

Recognizing these fundamental concerns, NMOGA offers the following comments and edits to the proposed provisions as a valued partner in crafting effective, practical rules.

MODIFY 19.15.28.8 Records: *For the life of a new gathering pipeline, the operator shall maintain a record of the route, materials, design criteria, technical standards, MAOP, installation, pressure and other pre-startup pressure ~~integrity~~ tests. ~~, d~~Documentation of ~~,~~ inspections, maintenance, repairs, corrosion control and cover and marking shall be maintained for a minimum of three years; transfer the records to a subsequent operator; and make such records available for inspection by the division upon request.*

> **Justification**: These requirements exceed PHMSA and PRC regulations and are unduly burdensome to operators.

MODIFY 19.15.28.9.C: *satisfy the applicable material standards incorporated by reference in 49 CFR 192.7 ~~current API standard~~*

> **Justification:** Having multiple sets or editions of construction standards will be confusing and unnecessary for operators building pipelines potentially regulated by two or more agencies. Maintaining one set of standards across agencies is critical to ensuring pipelines are constructed in a safe and efficient manner.

DELETE 19.15.28.10.D: ~~*allow for maintenance, periodic cleaning, integrity testing and other technology-based inspection tools; and*~~

> **Justification**: This requirement is unduly burdensome. No other state or federal standard requires Type A or B gathering lines be built to accommodate in line inspection (ILI) tools. The gathering lines this rule would regulate do not have the diameter, flow, or other operating characteristics to allow use of ILI tools. This requirement does not improve pipeline safety or reduce the risk of methane waste.

MODIFY 19.15.28.11.A.: *The operator shall ~~construct a new gathering pipeline in accordance with recognized and generally accepted industry practices.~~* satisfy the applicable construction standards incorporated by reference in 49 CFR 192.7

Justification: The requirements of this statement are too vague and allow potential conflicts with existing regulatory standards of construction. Standards recognized and generally accepted are those incorporated by reference in existing pipeline regulations from PHMSA and PRC. Allowing separate or differing standards to be used invites administrative and engineering conflicts.

Modify 19.15.28.12.D: *The division shall approve, approve with conditions, or deny the variance within 60 days of receipt. If the division denies the variance, it shall provide the operator with the reasons for denial. If the Division denies the variance or fails to act within 60 days, the operator may request a hearing with a Division Examiner. ~~have lapsed without a response from the division, then the variance is deemed denied .~~*

Justification: Operators must have an avenue to bring action or closure to their requests. This modification follows similar provisions in 19.15.29.4.C (Releases)

Modify 19.15.28.13.A. *The operator shall file with the division a GIS digitally formatted as-built map. GIS data submitted to the division will be for internal use only and not made available to the public at a resolution greater than 1:24,000. GIS data flagged as confidential business information will be protected and kept confidential by the division.*

Justification: Providing mapping to the agency has little direct impact on reducing waste and presents a variety of concerns over security, confidential business information, and the specific details of what information will be required for these submittals.

DELETE 19.15.28.13.B: *~~The operator shall file with the division an updated GIS digitally formatted as-built map of its gathering pipeline and natural gas gathering system not less than annually.~~*

Justification: Annual reports are too frequent if no changes have occurred in the system. Reports submitted following changes to a gathering system, in conjunction with the initial report filing, are adequate to provide the agency an accurate depiction of each gathering system.

Modify 19.15.28.13.C: *The operator shall install and maintain markers that identify the location of a new gathering pipeline when crossing a public right-of-way ~~or utility easement, except that markers shall be placed in a manner to reduce the possibility of damage or interference with surface use if practicable and the surface owner grants permission~~.*

Justification: Line markers at power line crossings are not required under PHMSA or PRC regulations and do not enhance safety or the reduction of waste. Compliance with marker obligations cannot and should not be based on surface owner "permission."

Modify 19.15.28.13.D: *If a ~~For each new~~ gathering pipeline is intended for service transporting ~~that transports~~ natural gas containing a hydrogen sulfide concentration equal to or greater than 100 ppm, the operator shall install and maintain markers that conform with the current ANSI standard Z535.1-2002 (Safety Color Code). The markers shall be readily readable and contain the words "may contain poison gas" and other information sufficient to warn the public of the potential hazard. The operator shall prominently post the markers at locations, including entrance points to oil and gas facilities where gas meeting the criteria of this part may be present and road crossings, sufficient to warn the public of the potential hazard.*

Justification: The existing language is vague and does not account for changing gas composition over the course of a well's lifespan. This requirement should apply to those pipelines and facilities known or designed to transport sour gas and should not penalize operators for normal fluctuations in H2S content. The phrase "entrance points" requires clarification.

Modify 19.15.28.14.A *The operator shall ~~retain a certified third-party inspector who shall~~ inspect a new gathering pipeline with a nominal ~~an outside~~ diameter of 8" or greater before placing the gathering pipeline into service. An inspector must be qualified by education, training, or experience.*

Justification: PHMSA and PRC do not require certification of pipeline inspectors for general construction and do not incorporate by reference any standards of certification. The proposed rule also does not detail what constitutes a "certified inspector." No records are required to be retained for the unknown certificate. Industry supports inspection of pipeline construction within reasonable and existing guidelines and without creating labor shortages of "certified" inspectors. If a certification is required, it is suggested that API 1169 be consulted as the standard for construction inspection certification.

Modify 19.15.28.14.B: *The operator shall maintain a record of the inspection, including the qualifications ~~certification~~ of the inspector and the inspector's certification that the gathering pipeline was constructed as prescribed by generally accepted engineering practices or industry standards. ~~the manufacturer's specifications and in accordance with 19.15.28 NMAC.~~*

Justification: See issues with inspector certification in 19.15.28.14.A. Additionally, manufacturers of line pipe, components, and fittings do not provide construction specifications or installation instructions for their products. There is no guidance on what an "inspector's certification" of construction should look like or what information it must contain. The requirements of this rule should be aligned with existing pipeline construction inspection practices required by PHMSA and PRC and clarified to represent the realities of pipeline design and construction as regards operator and industry engineering standards.

Modify 19.15.28.15 PRESSURE TESTS: *New steel gathering pipelines shall have a MAOP established by pressure test following the guidance of the most recent edition of API RP 1100 or 49 CFR 192 Subpart J. ~~Before the operator places into service a new gathering pipeline, the operator shall establish the MAOP, which shall not exceed eighty percent of the internal pressure rating for the gathering pipeline, using the current API recommended practice.~~*

Justification: Not all gathering lines require a hydrostatic pressure test and MAOP is not, as required by 49 CFR 192 and PRC, accomplished solely by pressure test. The proposed language provides the clarity operators need to ensure compliance with the requirements of this rule.

Modify 19.15.28.16 ***START-UP NOTIFICATION:*** *Operators shall notify the division in writing of intent to construct any gathering pipeline greater than 1 mile in length not less than 30 days prior to the commissioning of the gathering pipeline. ~~After the operator inspects and pressure tests a new gathering pipeline, and no later than 30 days before the operator intends to place the gathering pipeline into service, the operator shall notify the division in writing.~~*

- **Justification:** There is often a much smaller time window between completing a hydrotest and commissioning a pipeline, especially with well connects. If the agency intends to inspect all new construction, or even some portion thereof, conducting that inspection post-hydrotest raises serious concern about having to excavate and re-work portions of the pipe an inspector may find unsatisfactory for one reason or another. Construction inspection should take place prior to hydrotests to allow operators the opportunity to correct deficiencies in a timely and cost-effective manner.

***Modify 19.15.28.17.C**: The operator shall install a cathodic protection CP system on new steel gathering pipelines that are DOT regulated. That system should meet the minimum standards set forth in CFR 192 Subpart I. ~~The operator shall install a CP system on a new gathering pipeline that meets or exceeds the minimum criteria set forth in the National Association of Corrosion Engineers SP0169-2013, Control of External Corrosion on Underground or Submerged Metallic Piping Systems, 2013 Edition, including~~*

Justification: Cathodic protection (CP) cannot be done on composite or poly pipelines which are common in the industry. There are also regulated DOT pipeline in New Mexico subject to CFR 192 regulations. By setting two different standards on the same pipeline, you create an untenable situation for operators. Gas pipelines operating under CFR 192 do not mention this NACE standard at all. Liquid lines regulated by CFR 195 reference this document, but the 2007 version, not the 2013 version. Meeting the criteria under the proposed language would cost approximately:

- New Ground Beds: $6,000,000 up-front with an increase in year-over-year operating costs with more beds to replace as they wear out.
- New Test Stations: $500,000 up-front.
- Additional people to Manage the Program: $900,000 annually

Delete *19.15.28.17.C*(2): *~~minimization of stray current on neighboring underground structures~~;*

Justification: Upon request from another operator or request from operator to another operator, interference issues are addressed either through bonds or anodes

Delete *19.15.28.17.C*(*3*): *~~a design life commensurate with the required life of the gathering pipeline;~~*

Justification: CP systems are not built according to the required life of the pipeline. CP systems are built to provide proper current along the pipeline and are maintained until such time that they need to be replaced when the anodes have been depleted. Design life is not a factor in the installation of CP systems and should not be a requirement if proper monitoring and maintenance is performed per other regulatory requirements and industry standards.

Delete 19.15.28.18.A*:* *~~The operator shall test a new or existing gathering pipeline for adequate CP every two years.~~*

Justification: This creates a conflict between agencies. CFR 192 requires annual surveys of CP. For pipelines regulated by CFR 192, this sets two different standards and creates unnecessary confusion. Excavating existing gathering lines to install test stations to meet the requirements of this rule poses an unnecessary safety risk. Excavation of vintage pipe creates unnecessary and avoidable safety risks.

Delete 19.15.28.18.B*: ~~The operator shall inspect the rectifier or other impressed current power source for proper operation each calendar quarter with at least 60 days between inspections.~~*

> **Justification:** This creates a conflict between agencies. CFR 192 requires confirmation of rectifiers every two months not to exceed 75 days. For pipelines regulated by CFR 192, this sets two different standards and creates unnecessary confusion.

Delete 19.15.28.18.C*: ~~The operator shall electrically check additional components for proper performance each calendar quarter with at least 60 days between inspections.~~*

> **Justification:** This requirement is vague. There is no clarification as to what components need to be checked. There is also no explanation as to what 'electrically checked' means and no explanation of what requirements define 'proper performance'.

Delete 19.15.28.18.D*: ~~The operator shall promptly correct abnormal internal corrosion, including increasing pigging, using corrosion inhibitors, coating the gathering pipeline with an appropriate material such as epoxy paint or other plastic liner or implementing a combination of these actions.~~*

> **Justification:** This requirement does not account for the way in which low pressure and low flow gas gathering systems operate. Coating the internal surface of a pipeline that cannot be treated with inhibitors would be impossible. Plastic liners inserted into gathering lines is as expensive as replacing the line. In most cases, pipelines are not configured with launchers and receivers. There is a reason for this. These lines do not have enough velocity of gas to move a pig down the line. The more likely outcome if you got a pig into the line is that it would get stuck, which creates a very dangerous abnormal operating environment. Clearing a pig from a line is one of the most dangerous things operators do on pipelines. It should be avoided at all costs. This is why companies utilize chemicals such as methanol to ensure that there are no freezes in pipelines that are pigged. Those ice blockages will stop a pig. Beyond pigging, inhibitors are effective when you can apply the chemical to the entire circumference of the pipeline. Batch treatments with v-jet pigs are the most reliable way to do this. Where pipelines cannot be pigged, the next best option is to use continuous injection with atomizers to try and move the chemical downstream in both the gas and liquid phase of the pipeline to coat as much of the pipe surface as possible. All that said, most pipelines in low pressure gas gathering systems are unable to transport inhibitors downstream and coat the pipeline. Injecting chemicals becomes a waste of money and it instead ends up at the plant where it must be disposed. The more environmentally sound approach is to not put chemicals in these lines. There are simply pipelines that cannot have the internal corrosion threats mitigated with chemicals.

Delete 19.15.28.19.A(1): ~~*The operator shall take reasonable actions to prevent the failure and leakage and minimize corrosion of a new or existing natural gas gathering system.*~~

> **Justification:** "Reasonable actions" is very vague and open to interpretation. Operators are naturally incentivized to minimize leakage on their pipelines and this vague standard serves little purpose.

MODIFY 19.15.28.19.A(2): *If the operator discovers a condition that could adversely affect the safe and proper operation of a natural gas gathering system, the operator shall correct the condition as soon as possible, provided however that the operator shall take immediate action including but not limited to*

reducing pressure to a safe level, immediate repair, or a temporary shutdown of the pipeline ~~*cease the operation of the natural gas gathering system or segment of gathering pipeline*~~ *if the condition presents an immediate hazard to persons or property until the condition is corrected.*

> **Justification:** There are options to protect persons and property besides a shutdown. Allowing operators the ability to choose equally-safe methods of protecting their pipelines besides total shutdowns allows additional operational flexibility that may prevent venting, flaring or additional waste of gas through facility upsets or shutdowns.

MODIFY 19.15.28.19.A(3): *Conditions that could affect the integrity of a natural gas gathering system shall be evaluated and repaired according to the schedule in ASME/ANSI B31.8S section 7.*~~*When the operator discovers a condition that affects the integrity of a natural gas gathering system, it shall immediately investigate, report and correct the condition and report and remediate any releases in accordance with Subsection C of 19.15.28.22 NMAC.*~~

> **Justification**: Immediate reporting of all anomalies or conditions that could impact the safe operation of a pipeline at its designated MAOP serves no purpose where operators are already taking actions to ensure the integrity of the pipeline. Repairs are not the only method of making a pipeline safe to operate – pressure reductions or other operational controls are equally effective and must be considered.

DELETE 19.15.28.19.A(4): ~~*The operator shall take reasonable precautions to prevent the unintentional release of natural gas during maintenance of a natural gas gathering system.*~~

> **Justification:** "Reasonable precautions" is vague and open to interpretation. Reworking this statement to define "reasonable actions" would likely result in a lengthy and detailed regulation. Operators are naturally incentivized to minimize releases from their pipelines and this vague standard serves little purpose.

MODIFY 19.15.28.19.A(5): *During* ~~*scheduled*~~ *maintenance of a natural gas gathering system, the operator shall flare the natural gas during blowdown except where to do so would increase the total volume of gas vented/flared or where documented site-specific hazards make the use of a flare impracticable. Maintenance activities that will cause the release of 50 mcf or less of gas are exempt from this requirement.* ~~*using a portable flare stack which complies with the flare stack standards in Paragraph (5) of Subsection D of 19.15.27.8 NMAC*~~*.*

DELETE 19.15.28.19.A(6): ~~*During unscheduled maintenance of a natural gas gathering system, the operator shall make every attempt possible to flare the natural gas during blowdown of a gathering pipeline using a portable flare stack that complies with the flare stack standards in Paragraph (5) of Subsection D of 19.15.27.8 NMAC.*~~

> **Justification for A(5) and A(6):** No reason to differentiate here between "scheduled" and "unscheduled' maintenance. NMAC 19.15.29.7 recognizes that releases of 50 MCF or less does not constitute waste or present a safety hazard, particularly in isolated areas. Not all pipeline locations are conducive to the use of a portable flare. Factors include terrain, accessibility, site size, fire hazards, and availability of equipment. "Every attempt possible" could mean blowing down additional piping in the event the blowdown valves nearest the location of maintenance

are inaccessible to the flare equipment. This could greatly increase the amount of gas flared and presents additional safety and emissions concerns with a more lengthy and complicated flaring arrangement.

DELETE 19.15.28.19.B: ***Replacement or repair***

Justification: This section overlaps PHMSA and attempt to address in 9 bullet points what PHMSA takes multiple pages of code to thoroughly and comprehensively address. In general, the requirements of this section are extremely vague, do not provide adequate guidance to operators on the acceptability of various methods to make pipelines safe following discovery of a repair condition, and, if implemented, would subject operators to the subjective judgement of a division inspector post-fact as to the acceptability of any repairs. This section should be removed in its entirety. If this section is not deleted, then NMOGA suggests at least the following changes.

DELETE 19.15.28.19.B(1): *~~The operator shall replace or repair a component in a new or existing natural gas gathering system in a safe manner that prevents injury to persons or damage to equipment or property.~~*

Justification: "Safe manner" is too vague for operators to comply. It leaves open to an inspector's interpretation what "safe manner" means.

MODIFY 19.15.28.19.B(3): *The operator shall not replace or repair any pipe, valve or fitting on a new or existing gathering pipeline unless the ~~replacement or~~ repair is designed to ~~the MAOP~~ meet or exceed the construction and service specifications of the original gathering pipeline.*

J**ustification**: More specificity is needed in repair methods and allowable post-repair wall thickness, dent depth, and similar issues. Sleeves, wraps, cutouts and similar equipment are not discussed, and the requirement again leaves open to division interpretation post-repair whether the method used was appropriate. There are more considerations than meeting or exceeding MAOP, including fitness for service, material grade compatibility and engineering analysis of external loads, temperature, and operating parameter

MODFIY 19.15.28.19.B(4): *The operator shall visually inspect all repair welds on gathering pipelines prior to resuming service. Inspectors shall be qualified by appropriate training and experience. Welds on gathering pipelines operating at greater than or equal to 20% of Specified Minimum Yield Strength (SMYS) shall be nondestructively tested in accordance with established procedures and by persons trained and qualified in the established procedures and with the equipment employed in testing. ~~The operator shall verify the integrity of any replaced or repaired segment of a new or existing gathering pipeline by using a smart pig or other division-approved method before returning the gathering pipeline to service.~~*

Justification: Requiring the use of an ILI tool or (presumably) hydrotest for all replacements and repairs exceed state or federal safety standards and changes the economics of repairs. An ILI tool run typically costs $100,000 or more. The increased costs associated with requiring an ILI tool run will unnecessarily increase abandonments, production losses, shut-ins, and a decay of infrastructure leading to the potential for increased emissions. Further, many gathering lines cannot accommodate them either due to construction or gas flow rates. Hydrotesting older pipe

does not further the goal of pipeline safety or emissions reduction as it stresses the pipe and may promote or exacerbate metal weakness.

REPLACE 19.15.28.19.B(5): *Operators shall develop and implement gathering pipeline repair and replacement procedures compliant with the requirements of applicable technical standards referenced in 49 CFR 192.7. Procedures developed to comply with PRC and PHMSA repair and replacement requirements are acceptable for use when repairing gathering pipelines and gathering pipeline components.~~The operator shall conduct a replacement or repair in accordance with the manufacturer's specifications or an applicable technical standard.~~*

Justification: Line pipe manufacturers, repair sleeve manufacturers, etc. do not provide procedures or processes for the use or installation of their product, nor do component manufacturers. Technical standards from API, ASME, etc. provide guidance on pipe / component selection, compatibility, and installation methods. State and Federal code also provide explicit guidance on repair methods.

DELETE 19.15.28.19.B(6): ~~*The operator shall replace or repair each segment of pipe, valve or fitting that leaks or is unsafe before returning a gathering pipeline to service.*~~

Justification: "Unsafe" is a subjective term with no guidance and again open to the subjective interpretation of a division inspector. This is an attempt to summarize the repair criteria in 192.933 and lacks necessary detail to guide operators' decisions. If this item is to be retained, it should be replaced with a modified version of 192.933(a). Pipeline may be made safe by means other than repair or replacement, including a pressure reduction.

DELETE 19.15.28.19(B)(7): ~~*While conducting a repair, the operator shall take reasonable precautions to prevent the unintentional release of natural gas during replacement and repair of a new or existing natural gas gathering system.*~~

Justification: "Reasonable precautions" is vague and open to subjective and potentially arbitrary enforcement. Reworking this statement to define "reasonable precautions" will require lengthy and detailed regulations. Operators are naturally incentivized to minimize releases from their pipelines and this vague standard serves little purpose.

Modify 19.15.28.19.B.(8): *During scheduled or unscheduled replacement or repair of a new or existing natural gas gathering system, the operator shall flare the natural gas ~~during blowdown using a portable flare stack which complies with the flare stack standards in Paragraph (5) of Subsection D of 19.15.27.8 NMAC.~~ except where to do so would increase the total volume of gas vented/flared or where documented site-specific hazards make the use of a flare impracticable. Maintenance activities that will cause the release of 50 mcf or less of gas are exempt from this requirement.*

DELETE *19.15.28.19.B(9):* ~~*During unscheduled replacement or repair of a new or existing natural gas gathering system, the operator shall make every attempt possible to flare the natural gas during blowdown using a portable flare stack which complies with the flare stack standards in Paragraph (5) of Subsection D of 19.15.27.8 NMAC.*~~

Justification for B(8) and B(9): No reason to differentiate here between "scheduled" and "unscheduled' maintenance. NMAC 19.15.29.7 recognizes that releases of 50 MCF or less does not constitute waste or present a safety hazard, particularly in isolated areas. Not all pipeline locations are conducive to the use of a portable flare. Factors include terrain, accessibility, site size, fire hazards, and availability of equipment. "Every attempt possible" could mean blowing down additional piping in the event the blowdown valves nearest the location of maintenance are inaccessible to the flare equipment. This could greatly increase the amount of gas flared and presents additional safety and emissions concerns with a more lengthy and complicated flaring arrangement.

MODIFY 19.15.28.19.C(1): *No less than seven days prior to the date of scheduled maintenance, replacement or repair of a natural gas gathering system, the operator shall provide written notification to upstream operators whose natural gas is gathered by the system of the date and expected duration that the system will not gather natural gas except where circumstances cause the planned day and/or time of maintenance to change in which case the operator shall provide notice no more than 24 hours after the change in scheduling.*

Justification: Flexibility is needed for this requirement, as some maintenance is opportunistic. If a plant or major producer goes down for an unscheduled repair planned pipeline maintenance may have its schedule accelerated to create efficiency.

DELETE 19.15.28.20 *INTEGRITY MANAGEMENT PROGRAM FOR NEW AND EXISTING GATHERING PIPELINES*

Justification: These proposed methods are difficult if not impossible to execute on technical grounds or produce an increased risk to pipeline integrity. Instrumented leak detection on a routine basis provides the safest, most cost-effective, and most reliable method of monitoring pipeline integrity and responding to potential issues. Integrity management begins with adequate procedures. It would be better to require a pipeline be designed and constructed to industry standards/regulatory requirements and maintained in accordance with routine inspections (patrols, damage prevention, establish MAOP, line markers, public education, CP) than to subject lines with a low risk factor to the costly effects of ILIs, over burdensome pressure testing requirements.

Subparagraph 28.20.A annual pressure tests are problematic due to metallurgical concerns - repeatedly straining a pipeline, especially older pipes, can cause metal fatigue and exacerbate existing or incipient failure conditions. Additionally, no provisions are given for the test medium or test methodology. Introducing water into the pipeline requires unnecessary venting / flaring of gas and brings with it additional internal corrosion concerns in addition to the consumption of large quantities of domestic water and its subsequent discharge. There is no value to this test as relates to pipeline integrity. If natural gas is not allowed as a test medium, this will contribute to waste.

Subparagraph 28.20.B continuous pressure monitoring is not practical. The operating pressures of gathering pipelines are subject to myriad fluctuations that make traditional CPM leak detection systems unworkable. Factors from weather to seasonal changes to producer downtime produce unpredictable changes in operating parameters. Gas gathering is not a steady-state operation, unlike transmission pipelines with single inlets and outlets controlled by pumps or compressors. As a result, this type of monitoring is not common among gathering

pipelines. Most SCADA systems would not have the capabilities in remote areas to provide data fast enough to give valuable results. Many of these gathering lines pressure tend to rise and fall leading to false indications of leaks.

Subparagraph 28.20.C (smart pigging every three years) is not practical. Small- and medium-diameter gathering pipelines were not, and are not currently, built to accommodate ILI tools. Issues such as bend radius, valve design, and diameter variations physically prevent the passage of such tools. Additionally, ILI tools require a precise and consistent product flow to record accurate data. Gathering pipelines lack sufficient product flow / velocity and consistency of flow to sufficiently propel an ILI device at its minimum required speed. The cost of an ILI tool run that has limited chances of capturing useable data is, at a minimum, $40,000 in startup costs and an additional $700-$800 per mile of pipe. The economics of this type of inspection are not warranted by the amount of gas transported and the risks of recovering stuck tools. The instrumented leak detection contemplated by Part 28.21 is the safest, most reliable, and most commonly used method of integrity monitoring for gathering pipelines and allows operators flexibility in the technology and approach used to conduct the surveys. This is the best and most-supported method of integrity monitoring in the proposed rule and we encourage it to be adopted over the impractical and potentially unsafe requirements of 19.15.28.20.

Section 5

Measurement Requirements in Parts 27.8.E and 28.22.C Should Be Limited to What Can Be Reasonably and Accurately Measured; Other Volumes Should Be Calculated or Excluded from Regulation as *De Minimis*.

Safely and accurately measuring gas volumes in low-flow and low-pressure sources presents several well-documented technical challenges. In many circumstances, setting aside safety issues, calculated gas volumes actually can be more accurate.

NMOGA recommends therefore that the proposed rule's measurement requirements should be limited to only gas volumes that can be reasonably and accurately measured. Operators should be given the option to calculate all other volumes of gas, based on engineering principles and operational data, or in some circumstances based on the equipment's manufacturer data or industry standards.

In addition to not being appropriate in all circumstances, the mandate to measure all vented, flared, and beneficially used gas volumes also conflicts with existing and proposed BLM regulations, which recognize the technical challenges inherent in measuring gas volumes and provide operators the option to calculate gas volumes.

As drafted, it is not clear whether the proposed requirements in 19.15.27.8 (E) apply retroactively or only to new locations. If the requirements are intended to be retroactive to existing locations, the rule should provide an implementation schedule to achieve compliance within a reasonable timeframe and takes into account technical feasibility. The proposed regulation makes no consideration for the considerable costs a measurement mandate would impose on the industry, irrespective of whether measurement is reasonable or effective. The high costs further justify limiting the mandate to gas volumes that can be reasonably and accurately measured.

Challenges of Flare Measurement

Due to the well-known technical challenges of achieving accurate measurement of flared gas volumes, NMOGA members support inclusion of an option to calculate flared gas volumes. Many of these challenges are detailed in the American Petroleum Institute's Manual of Petroleum Measurement Standards 14.10 ("API MPMS Ch. 14.10") and include the following technical issues applicable to measuring flared gas volumes:

- Low-pressure or low-flow conditions increase uncertainty and inaccuracy in measurement as gas flow transitions from laminar to turbulent flow. Low-pressure/low-flow, which can occur on high pressure flares as they flow to atmospheric pressure, conditions also challenge the ability to use traditional differential pressure measurement devices, e.g. orifice plates. With rapid decline expected in unconventional wells, it is difficult to select a single appropriate meter size that can safely and effectively handle low-flow conditions, especially as pipe sizes are typically large in flare meters to ensure minimal backpressure.

- Similarly, meters must be effective, safe, and accurate in extreme turndown events, which is when gas flows drop from maximum to minimum flows. Meters must be effective at both peak design rates all the way down to the purge gas rate, which is effectively an infinite turndown.
- Compositional changes related to changing process gas sources challenges the ability to use a meter that is compositionally dependent.
- Safety considerations related to blocked flow. For example, flare meter paths must be kept clear for safe facility relief, however, differential pressure meters, such as orifice plates, can create potential blockage points in the line.
- Liquids handling issues. For example, certain meters cannot handle liquid drop out in flare lines due to condensation of water or hydrocarbons and will stop measuring reliable quantities upon contact with liquid; this is a major obstacle for rich gas operations like in the Delaware Basin.

The API MPMS 14.10 explains that: "[M]measurement of flow to flares remains distinctly different from traditional flow measurement for accounting or custody transfer. Flares are safety relief systems which typically receive highly unpredictable rates of flow and varying compositions, and for safety reasons do not often lend themselves to being taken out of service to accommodate measurement concerns, even for short periods. Therefore, some of the traditional paradigms applicable to custody transfer measurement systems (reasonably predictable flow rates and composition, the use of in-line proving, capability to readily remove meters from the piping system, the use of by-pass connections, the use of master meters, etc.) must be abandoned altogether or highly modified in flare measurement applications."

Additional Notes from API MPMS 14.10 Regarding Technical Challenges to Flare Flow Measurement

"Flare flow measurement by its nature provides unique challenges in terms of extreme turndown, large pipe sizes/limited straight lengths, and variations in process pressure, temperature, and fluid composition."

"All gas flow meters have a finite range of use. It is important to account for the entire range of flare flow rates. Low flow rates should not be ignored if their cumulative flare gas volumes are significant. Flow rates higher than a meter's known performance range will result in flare gas volume that is not measured and increase overall measurement uncertainty."

"No single type or design of flow meter is suitable in all flare gas measurement applications."

Technology	Sensitivity to Entrained Mist or Liquid	Sensitivity to Fouling	Ability to Detect Fouling
Differential Pressure	Low to Moderate (varies with liquid load)	Moderate	Physical Inspection
Thermal Flow	High	High	Physical Inspection
Optical	Moderate	High	Meter Diagnostics
Ultrasonic	Low (unless sensor is immersed in liquid, then very high)	High	Meter Diagnostics
Vortex	Low (if meter is installed in horizontal line and bluff body is horizontal)	Low to High (varies with meter design)	Physical Inspection

"Flare meters are expected to operate over a wide range of velocities. Meters operating at close to atmospheric pressure and velocities <0.3 m/s – 0.6 m/s (1 ft/s – 2 ft/s) can be operating in transition from turbulent to laminar flow or laminar flow. The meter manufacturer should be consulted on how the meter handles flow in this difficult area and the effect on metering accuracy. The user is also cautioned that operation at these low velocities may also subject the meter to flow instabilities caused by ambient operating conditions such as wind blowing across the flare outlet, dissimilar thermal heating of the flare piping, etc."

"Orifice meters, which produce significant permanent pressure loss, are typically not suitable as flare meters, with the exception of measuring the addition to the flare system of such streams such as nitrogen sweep gas or fuel gas."

"Thermal flow meters have significant sensitivity to variations in gas composition (see 10.4.3). Thermal flow meters are not recommended for applications where liquid droplets or liquid mist are normally present due to their extreme sensitivity to these substances."

"For measurement at low Reynolds number (low velocities), this error can become significant. Many meters experience a significant change in meter factor as the flow transitions from turbulent to laminar flow."

Alternatives to Measurement, Applicability, and Scope

NMOGA recommends allowance for both measurement and calculation of flared volumes, as follows.

- Measurement: Flare measurement must include safety considerations and should recognize industry-approved gas measurement standards.
- Calculation Protocols: The operator may choose to calculate gas volumes at high-pressure flares in lieu of measurement using one of the following methodologies:

  (1) If the high-pressure produced gas is measured, flared gas volumes may be determined by subtraction as follows: flared volume = produced gas – gas sold – beneficially used gas; or

(2) Flared gas volumes may be determined through use of a representative gas-to-oil ratio (GOR) as follows: flared volume = GOR oil produced – gas sold – beneficially used gas;[9] or

(3) If the flaring follows a day of no flaring, flared volumes may be determined through use of prior day's sales data as follows: flared volume = day 1 sales – day 2 sales (assuming beneficial use is constant); or

(4) If using a flare during depressurization of natural gas gathering lines, the operator may calculate the volume of gas by solving for V in the ideal gas law as follows: PV=nRT; or

(5) Such other methods as may be approved by the Division.

Calculation and measurement approaches are both acceptable best practices for flare reporting. The Division has provided no justification for why calculation of flared gas volumes is excluded. These approaches are demonstrated in Figure below. By knowing the (1) total produced gas coming off high pressure separation equipment (either through use of a GOR calculation or by a physical meter), (2) the sales gas (by meter), and (3) the lease use (by manufacturing data or by meter), one can calculate the high pressure flaring by subtraction.

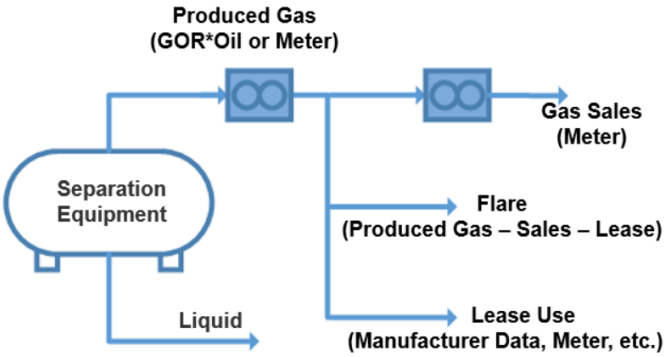

GOR = GAS TO OIL RATIO

<u>Calculation methods can be more accurate than measurement for flare reporting and should be allowed, especially for low pressure and low flow gas</u>.

Given the range of conditions and uncertainty related to low flow, gas-oil-ratio (GOR) calculations or similar methods can better capture the total site volumes flared under certain circumstances.

For instance, the World Bank recommends using GOR as a "reasonable" alternative to metering and updating GOR "annually" using at least "24-hour tests." *See The Global Gas Flaring Reduction Partnership (GGFR) and the World Bank* (18 September 2008).

[9] The GOR must be updated periodically and be based on test separator results, produced gas meters, flowback equipment, aggregate data from nearby wells, temporary and mobile measurement equipment, or a representative average of good sales meter data.

The applicability of measurement requirements to high-pressure vented, flared, or beneficially used gas (*i.e.*, greater than or equal to 15 psig) should be properly limited to what can be reasonably and accurately measured. All other low-pressure vented, flared, or beneficially used gas (*i.e.*, less than 15 psig) should be calculated based on sound engineering and operational knowledge. NMOGA supports clarification that measurement requirements apply only to high-pressure associated flared gas. All other low-pressure vented, flared, or beneficially used gas volumes should be calculated or excluded from regulation because the volumes are *de minimis*. Specifically, the following categories of activities and sources require further clarification:

- Drilling and completion activities should be excluded from the measurement requirement because it is often neither practical nor possible to measure gas vented during these activities. For example, it is not physically possible to measure gas evolving off the shaker pits and such gas is not waste.

- Operators should have the option to measure or calculate gas volumes vented, flared, or beneficially used during flowback operations in associated gas production.

- Low-pressure flare gas should be excluded due to the inherent technical difficulty of accurately measuring low-pressure gas sources. This includes venting and flaring from storage vessels. Tank vapor rates can fluctuate dramatically depending on production rates, operation controls, and ambient conditions, making accurate measurement infeasible.

- Vented gas or fugitive emissions (e.g., from a pressure safety valves, pigging events, liquid unloading, or pressure/vacuum relief valves) should be calculated, again due to the challenge of accurately measuring low-volume/low-pressure gas, but also because in most instances, it is not possible to physically install a meter on these devices.

- Beneficial-use gas volumes should be calculated based on manufacturing data or industry standards (e.g., gas consumption in burners, flare pilots and purge gas, etc.), as it is often impractical or physically impossible to measure.

EPA, NMED, and BLM allow for calculation of gas volumes from low-pressure flared and vented sources given the technical challenges inherent in such conditions to accurately measure gas volumes.

Conflict with BLM Regulations

The proposed rule directly conflicts with industry standards and BLM regulations. BLM explicitly allows manufacturing data for beneficial-use measurement given the challenges to accurately measure (e.g. due to very low flow). *See* 43 CFR §3178.8(e) ("When estimating [lease-use] gas volumes, the operator must use the best available information to make a reasonable estimate."). The challenges associated with accurately measuring low-pressure flared or vented gas volumes are recognized in the draft midstream NMOCD rule at 19.15.28.22(C)(5). Similar language should be replicated and incorporated into the proposed rule for upstream operations. The rule should incorporate the general approach:

"When not technically feasible or practicable to accurately measure gas volumes, gas volumes should be estimated based on sound engineering and operational information." Part 27.8.E(1) states that flare measurement must meet the standards of 43 CFR § 3175; however, that mandate directly conflicts with existing and proposed BLM regulations. For example, in 43 CFR § 3179 (the Venting & Flaring Rule) BLM recognizes the challenges inherent to flare measurement and allows operators to either measure or calculate the volume of vented or flared gas; it does not prescribe the requirements of 43 CFR § 3175 venting or flaring, because the requirements cannot be achieved. In fact, the recently issued draft revised rules in 43 CFR § 3173 clarify that flare meters are not Facility Measurement Points (FMPs) and thus need not meet the performance standards of 43 CFR § 3175.

Particular Challenges Associated with Orifice Measurement

Note that per API MPMS 14.10: "Orifice meters, which produce significant permanent pressure loss, are typically not suitable as flare meters, with the exception of measuring the addition to the flare system of such streams such as nitrogen sweep gas or fuel gas."

Where operators choose to employ flare meters instead of calculations for reporting flare volumes, the operator must have the flexibility to choose the best meter for their operating conditions (or have the option to use calculation as the appropriate methodology). Orifice meters cannot be prescribed. In fact, many companies will not use orifice meters due to potential restrictions in the relief system caused by blocked flow.

At low-pressure/low-flow conditions, it can be impossible to achieve sufficient differential pressure for accurate low-flow measurement using an orifice meter and still satisfy any beta ratio requirements (ratio of orifice diameter to inner pipe diameter) to avoid adverse backpressure within the system. The only way to safely design flare measurement is to size the orifice meter for the maximum possible flow under worst-case, abnormal operating conditions. This makes accurate measurement for low rates impossible and can lead to under-reported flare volume in low-flow conditions. For instance, in the case of potentially measuring gas flared from storage vessels, one might reduce the orifice size to capture the low-flow condition, but in doing so will cause increased backpressure when high-flow conditions exist, which will lead to venting out of the tanks.

Orifice measurement also is accountable for the majority of failure modes that could lead to under-reported volumes. For example, bent plates (caused by high flow through low-flow sized beta ratio orifices), entrained liquids (produced from rich streams and/or high flare events), and wax accumulation (again from rich gas streams) all contribute to reduce or lower the recorded flow rates with orifice meters. In addition, flare systems are typically subject to these types of errors, increasing the likelihood that volumes will be under-reported.

Implementation Timetable

It is not clear whether the requirements in 19.15.27.8(E) apply to existing locations or only new wells. Furthermore, because more than one well may be routed to a single flare, flare measurement is

independent of a well's APD, but is instead related to the startup of a facility, which may consist of many wells added over time.

If the measurement requirement is intended to be effective retroactively, the regulation provides no timetable for retrofitting existing locations, which would take significant time to implement the requirements. API MPMS 14.10 outlines the difficulties in retrofitting a location as certain flare headers are not designed for single flare measurement, do not have the proper straight run of pipe prescribed by the manufacturer, and do not have a flare scrubber to reduce liquids content. For these reasons, and others, NMOGA supports a phased implementation schedule, such as a 3-year implementation period in NMED's proposed VOC Rule, as there will be a shortage of available meters and flow computers. Implementation time is also required for developing the software for handling all these additional meters. Such a schedule could follow similar approaches as BLM rules, with timing based on and prioritizing meters that would have the highest throughput. NMOGA also supports exempting certain flare systems such that measurement is not required, e.g., based on total site gas production.

SECTION 6

The Proposed Reporting and Notification Requirements Create an Unnecessary Administrative Burden and do not Serve to Prevent Waste of Oil and Gas

NMOGA submits its comments under the following categories for ease of reference without quoting the entire text of the proposed rules.

A. Reporting during emergencies and malfunctions [Parts 27.8.B(3) and 27.8.D(4)]

During an emergency or malfunction, operators will be primarily focused on implementing procedures to ensure safety at and around the site. The best way to prevent waste is to immediately respond to the event. Therefore, instead of requiring operators to notify the division of an emergency or malfunction within 2 hours the division should adopt the same protocol as required in the rule governing releases (NMAC 19.15.29). NMOGA therefore proposes the following modifications:

19.15.27.8.B.3 In an emergency or malfunction, the operator may flare or vent natural gas to avoid a risk of an immediate and substantial adverse impact on safety, public health or the environment. The operator shall

~~(a) notify the division of the venting or flaring as soon as possible by email, but no more than two hours following discovery of the emergency or malfunction;~~

~~(b) file a form C-129 no later than 24 hours after commencing to vent or flare pursuant to Subparagraph (4) of Subsection E of 19.15.27.8 NMAC;~~

~~(c) notify the division as soon as practicable after it stops venting or flaring; and~~

~~(d)~~ comply with the applicable requirement to report a release pursuant to 19.15.29 NMAC.

19.15.27.8.D.4 For venting or flaring during an emergency or malfunction pursuant to Subparagraph (b) of Paragraph (2) of Subsection D of 19.15.27.8 NMAC, the operator shall

(a) ~~notify the division of the venting or flaring by email as soon as possible, but no more than two hours following discovery of the venting or flaring;~~ notify the division by email within 24 hours of discovery for major releases as defined in 19.15.29 NMAC and next business day for other releases.

(b) ~~file a form C-129 no later than 24 hours after commencing to vent or flare;~~ comply with applicable requirement to report a release pursuant to 19.15.29 NMAC.

(c) ~~notify the division as soon as practicable after the cessation of venting and flaring; and~~ If volume is less than 50 MCF, file a form C-129 within 15 days of the cessation of the event which would include duration, cause, and actual volumes vented or flared.

~~(d) comply with the applicable requirement to report a release pursuant to 19.15.29 NMAC.~~

B. Reporting Vented and Flared Natural Gas monthly on a volumetric and percentage basis [Part 27.8.E(2) and Part 28.22.C(6)

These provisions should be deleted.

For production activities, the reporting of volumes under 27.8.E(2) on a percentage and volumetric basis cannot be done under production accounting systems and will require a burdensome manual exercise that serves no purpose in preventing waste. Operators will be able to determine gas capture requirements using the volumetric reporting required by the current form C-115.

For gathering activities, the concept of "lost gas" in 28.22.C(6) is a fundamental element of "gas capture" and should be incorporated therein. The second issue with this requirement is related to reporting frequency. Monthly reporting is not necessary for purposes of monitoring "waste." Annual reporting on the C-115B in support of submittal of the Gas Capture report are adequate for the stated purpose of the NMOCD objectives regarding waste. Since gathering operations have never been subject to OCD reporting, it is unclear if the referenced form "C-115B" will work.

C. Reporting Vented and Flared Natural Gas during drilling, completion and production operations [Part 27.8.E(3)]

In general, NMOGA supports more accurate reporting of vented and flared volumes. However, the draft rules require duplicate notifications and reporting of events on multiple forms (C-129, C-141, C-115, C-115B,) which imposes inconsistent requirements and negates the intent of accurate information. In particular, the introduction of a new form C-115B for production operations, which requires monthly breakdowns of vented or flared volumes into 20 categories is more than current Production Accounting systems can handle without years of substantial modifications and significant upgrades. Production Accounting systems are not appropriate for this level of detail. They must remain auditable and correcting mistakes requires a comprehensive resubmittal of the entire C-115 package for the state for the month. Therefore, it does not allow for a high-level QA/QC. Requiring operators to determine and use 20 categories is overly burdensome and does not serve to reduce venting or flaring.

NMOGA supports instead reporting vented and flared volumes on the existing form C-115, but with less categories and clear guidance to the operators on what is expected to be reported. NMOGA's consolidated reporting categories include the types of activities in Part 27.8.E(3) and are identified in the Chart set forth below attached as Appendix B. This Chart includes a category of activities where volume reporting is not required because it is not feasible to measure or calculate with reasonable accuracy for the purposes of accounting for production or for compliance with statewide gas capture requirements. For example, volumes from "uncontrolled storage tanks" cannot be accurately measured and are operating losses resulting under low-pressure normal operations regulated by NMED.

To accomplish these goals and intent, NMOGA submits the following modifications to the reporting provision under 27.8.E:

MODIFY 27.8.E(3): *The operator shall report the volume of vented and flared natural gas for each month and should include volumes that are vented or flared from ~~in~~ each category in this subparagraph*

on form C-115~~B~~, ~~and state whether the reported volume was estimated or measured~~. The operator shall make and keep records of the measurements and estimates, including how the estimated volumes were calculated, for not less than five years and make such records available for inspection by the division upon request. The categories are:

> *(a) Beneficial Use (Used on lease) – gas produced from leases that is used for operations and production purposes;*
>
> *(b) Necessary High Pressure (HP) Flare & Vent– means the disposal of natural gas diverted from existing high-pressure production, gas gathering, and processing infrastructure due to maintenance operations or system emergency, upset, or malfunction conditions that requires the immediate corrective action to vent or flare to ensure safe operation and the safety of personnel.*
>
> *(c) Unnecessary High Pressure (HP) Flare & Vent – means other high pressure flaring or venting that is not "Necessary" (e.g. insufficient pipeline availability or capacity).*

The Chart set forth below as Appendix B identifies the type of activities included under the above three categories and further describes the types of activities that do not require reporting.

19.15.27.8.E.(3) C-115~~B~~ Consolidated Categories & Gas Capture Calculation

NMOGA Proposed Categories	Rule 27 OCD Categories (Upstream)	Include in GC Numerator	Include in GC Denominator	Measured, Calculated, or Either[1]	Example Tank Battery with 5000 BOPD Production Rate GOR=3000
Sales Gas	Sales Gas	Yes	Yes	Measured	15 MMscfd
Beneficial Use C-115 Non-Transported Disposition Code U	(i) pilot gas for combustion devices; (j) purge gas to test or fuel combustion devices; (t) other not described above. Other benefical uses for normal operations (e.g. burners, engines) as approved by OCD	Yes	Yes	Either	up to 0.10 MMscfd
Necessary High Pressure (HP) Flare & Vent C-115 Non-Transported Disposition Code V or F	(a) emergency; (b) non-scheduled maintenance; less than 72 hours (c) equipment malfunction by operator; less than 72 hours (d) equipment malfunction by third party; less than 72 hours (g) routine equipment repair and maintenance, including blowdown and depressurization; less than 72 hours (p) natural gas quality that is not suitable for transportation and processing because of a high percentage of N2, O2, CO2, H2S, or other impurities; New - Commissioning of new pipelines, equipment, and facilities New - Flaring after processing through remote capture equipment (t) other not described above. Other HP Flare & Vent as approved by OCD	Yes	Yes	Either	0 - 15 MMscfd
Unnecessary HP Flare & Vent (Lost Gas) C-115 Non-Transported Disposition Code V or F	(b) non-scheduled maintenance; greater than 72 hours (c) equipment malfunction by operator; greater than 72 hours subset of (c) Malfunction due to poor maintenance, careless operation, or other preventable equipment failure (d) equipment malfunction by third party; greater than 72 hours (g) routine equipment repair and maintenance, including blowdown and depressurization; greater than 72 hours (o) insufficient pipeline availability or capacity; (t) other not described above. Other HP Flare & Vent as approved by OCD	No	Yes	Either	0 - 15 MMscfd
Infeasable to measure or calculate with reasonable accuracy for the purposes of accounting for production or for compliance with statewide gas capture requirements In the case of "uncontrolled storage tanks", these volumes are normal operating losses regulated by NMED Not reported on C-115	(e) drilling operations;	No	No	N/A	up to 0.20 MMscfd
	(f) completion operations;			N/A	
	(h) routine downhole maintenance, including operation of workover rigs, swabbing rigs, coiled tubing units and similar specialty equipment;			N/A	
	(k) manual liquid unloading;			N/A	
	(l) bradenhead tests;			N/A	
	(m) packer leakage tests;			N/A	
	(n) uncontrolled storage tanks;			N/A	
	(q) venting in excess of the design specifications of pneumatic controllers and pumps as a result of malfunction or improper or infrequent maintenance;			N/A	
	(r) commencing on January 1, 2022, venting as a result of normal operation of pneumatic controllers and pumps, except that			N/A	
	(i) in November 2021, the operator shall report the volume of vented natural gas that it reported to a state or federal agency, as revised to include data from pneumatic controllers and pumps in use during 2021 that were not included in the 2020 report; and			N/A	
	(ii) an operator who vents or flares less than 500,000 cubic feet per year of natural gas is exempted from this subparagraph;			N/A	
	(s) thief hatches that are not properly closed or maintained; and			N/A	
	(t) other not described above. Other LP Flare & Vent as approved by the OCD			N/A	

[1]Either: while it may not be feasible or possible to measure today, future technology may make it possible

Defintitions

Beneficial Use - gas produced from leases that is used for operations and production purposes.
High Pressure (HP) Gas - for the purposes of this rule will be defined as any gas at 15 PSIG or greater.
Low Pressure (LP) Gas - for the purposes of this rule will be defined as any gas lower than 15 PSIG.
Unsuitable Gas - gas that is unable to be sold due to quality.

Gas Capture Equation: Gas Capture % Proposal =

$$\frac{(Sales + Beneficial\ Use + Necessary\ HP\ Flare\ \&\ Vent)}{(Sales + Beneficial\ Use + Necessary\ HP\ Flare\ \&\ Vent + Unnecessary\ HP\ Flare\ \&\ Vent)}$$

NMOGA has included under "Necessary HP Flare & Vent" two additional categories for consideration:

Commissioning of new pipelines, equipment, and facilities. It is necessary to flare or vent during these operations to ensure safe operation and safety of personnel.

Flaring after processing through remote capture equipment. This is necessary because there are situations where operators may drill wells in stranded areas (e.g. wildcat wells with no existing infrastructure) or times where well completion plans do not align with midstream development or capacity (such as when the midstream experiences ROW delays). In such circumstances, rather than flaring the gas, shutting in the wells, or not even drilling the wells, operators may want to deploy remote capture equipment to capture the gas and truck off the location. Various technologies exist such as NGL (natural gas liquids) extraction, CNG (compressed natural gas), and LNG (liquefied natural gas). Relatively mobile equipment can be delivered and installed on site to take the raw gas stream and either compress and or cool it to remove heavier hydrocarbons (NGL) or convert to a more condensed state to facilitate trucking to a sales or use point (e.g. gas plant or electric frac site). There are various challenges to using such technology such as poor economics, proximity to market for trucked gas volumes, operation within air permit limits (typical equipment includes power generation and compression), enough pad space for equipment. However, as a backup alternative in special circumstances, the technology choices have proven useful to capture otherwise stranded gas. Given the challenges of using remote capture equipment, incentives are best applied to encourage usage, specifically classification of residue gas (e.g. in the case of NGL units, the gas that is not condensed) as captured and counted toward an operator's gas capture percentage. The best mechanism to capture gas is still via a pipeline with sufficient capacity but recognizing and encouraging a backup solution when pipelines are unavailable provides optionality to upstream operators. It should also be noted that these technologies have been used throughout North Dakota by many operators to meet capture targets. The original BLM Rule 43 CFR 3179 includes as "unavoidable lost" gas, "Flaring of gas from which at least 50 percent of natural gas liquids have been removed and captured for market, if the operator has notified the BLM through a Sundry Notice that the operator is conducting such capture." Such language is following the same practice as North Dakota gas capture rules, which consider combusted residue gas "captured" if 50% or more of the propane and heavier components are removed and sold. NMOGA recommends including the same clarity around remote capture equipment within the categorization of "Necessary HP Flaring & Vent."

D. Notification to the Division of Vented and Flared Natural Gas during production and gathering operations [Part 27.8.E(4) and Part 28.22.C(8)]

These provisions should be modified. NMOGA understands the need for event-based reporting to the NMOCD. This reporting should be accomplished through the existing C-141 reporting for all releases under NMAC 19.15.29. Enacting different requirements for venting and flaring will cause confusion and duplicative reporting without any benefit to preventing waste. In addition, this reporting is duplicative of NMED reporting for events at gas gathering booster stations. NMOGA therefore recommends that Parts 27.8.E(4) and 28.22.C(8) be replaced with the following:

> *For vented and flared volumes, the operator shall comply with applicable requirement to report a release pursuant to 19.15.29 NMAC. If the volume is less than 50 MCF, the operator shall file a*

form C-129 within 15 days of the cessation of the event which identified the duration, cause, and actual volumes vented or flared.

E. Reporting vented and flared natural gas volumes to royalty owners [19.15.27.8.E(5)]

This provision should be deleted. Requiring operators to report vented and flared natural gas to "all royalty owners" on a "volumetric and percentage basis" is outside Division's jurisdiction, is a contractual matter and is not reasonably related to the prevention of "waste" or the protection of correlative rights. The sheer number of royalty owners potentially falling under this rule will place an unreasonable burden on operators and will be accessible on the Division's website.

F. Reporting vented and flared natural gas volumes to NMED [Part 27.8.E(6) and Part 28.22.C(8)]

This provision is unnecessary and should be deleted. Any form filed with the Division can be obtained from the Division website. In addition, the citation to "20.2.27 NMAC" is incorrect as that section is reserved.

G. Reducing the amount of time to submit reports [19.15.7.24.B and 19.15.7.25.B]

The change to the reporting time frames should be deleted. At the same time the Division is asking for more detailed reporting, it in decreasing the time to submit those reports by 15 days. Diminishing reporting time frames from 45 days to 30 days will increase inaccurate reporting because an operator will not have time necessary to properly audit the information before filing. NMOGA recommends keeping the current timeframes for reporting.

H. Reporting Vented and Flared Natural Gas during gathering operations [Part 28.22.C(7)]

This provision should be modified by the Division. With respect to gathering operations, no current form exists since gathering operations have not been previously regulated by the Commission. To that extent that the Commission persists in this effort, a new form is required. Monthly reporting is not necessary for purposes of monitoring "waste" and the C-115B category reporting should be submitted annually to support the annual Gas Capture report. In addition, NMOGA recommends simplification of the C-115B reporting categories using the following language:

The operator shall report the volume of vented and flared natural gas annually by April 30th for the prior year. This report will be on form C-115B and include each category in 19.15.28.22.C(7). The operator shall maintain records of the measurements and estimates, including how the estimated volumes were calculated, for not less than five years and make such records available for inspection by the division upon request. The categories are:

(a) Beneficial Use – gas gathered that is used for facility operations purposes

(b) Necessary High Pressure Flaring & Venting - means the disposal of natural gas diverted from existing production, gas gathering, and processing infrastructure due to maintenance operations or system emergency, upset, or malfunction conditions that requires venting or flaring to ensure safe and reliable operations and the safety of personnel

(c) Unnecessary High Pressure Flaring & Venting - means other high pressure flaring or venting that is not "Necessary" (e.g. malfunction due to poor maintenance, careless operation, or other preventable equipment failure).

The Chart set forth below as Appendix C identifies the types of activities in 19.15.28.22.C(7) included under the above three categories and further describes the types of activities that do not require reporting.

19.15.28.22.C.(7) C-115B Consolidated Categories & Gas Capture (GC) Calculation

NMOGA Proposed Categories	Rule 28 OCD Categories (Midstream)	Include in GC Numerator	Include in GC Denominator	Measured, Calculated or Either[1]
Gas Gathered[2]	Gas Gathered	Yes	Yes	Measured
Beneficial Use Reported on C-115B	(f) pilot gas for combustion devices; (g) purge gas to test or fuel combustion devices; (o) other not described above. Other beneficial uses for normal operations (e.g. burners, engines)	No	No	Either
Necessary HP Flare & Vent Reported on C-115B	(a) emergency; (b) non-scheduled maintenance; less than 72 hours (c) equipment malfunction by operator; less than 72 hours (d) equipment malfunction by third party; less than 72 hours (e) routine equipment repair and maintenance, including blowdown; less than 72 hours (h) gathering pipeline blowdown; (j) gathering pipeline pigging; (i) gathering pipeline purging; (o) other not described above. Other HP Flare and Vent as approved by the OCD	No	No	Either
Unnecessary HP Flare & Vent (Lost Gas) Reported on C-115B	(b) non-scheduled maintenance; greater than 72 hours (c) equipment malfunction by operator; greater than 72 hours (d) equipment malfunction by third party; greater than 72 hours subset of (c) Malfunction due to poor maintenance, careless operation, or other preventable equipment failure (e) routine equipment repair and maintenance, including blowdown; greater than 72 hours	Subtracted	No	Either
Infeasable to measure or calculate with reasonable accuracy for the purposes of accounting for production or for compliance with statewide gas capture requirements In the case of "uncontrolled storage tanks", these volumes are normal operating losses regulated by NMED Not Reported on C-115B	(k) uncontrolled storage tanks; (l) venting in excess of the design specifications of pneumatic controllers and pumps as a result of malfunction or improper or infrequent maintenance; (m) commencing on January 1, 2022, venting as a result of normal operation of pneumatic controllers and pumps, except that in November 2021, the operator shall report the volume of vented natural gas that it reported to a state or federal agency, as revised to include data from pneumatic controllers and pumps in use during 2021 that were not included in the 2020 report; (n) thief hatches that are not properly closed or maintained; and	No	No	N/A

[1]Either: while it may not be feasible or possible to measure today, future technology may make it possible

Gas Capture Calculation: Gas Capture % Proposal = $\frac{(Gas\ Gathered - Unnecessary\ HP\ Flare\ \&\ Vent)}{(Gas\ Gathered)}$

[2]Gas gathered includes all gas entering the natural gas gathering system network

Section 7
The Statewide Natural Gas Capture Requirements are Overly Complicated

NMOGA members want to be part of the solution to reduce natural gas flaring in New Mexico and, thus, support the proposed gas capture rate of 98%. In other jurisdictions, at both the state and federal levels, where gas capture rate targets have been attempted there has been a recognition that the focus should be on high-pressure associated gas flaring. As discussed below, modifying the proposed regulation to focus on high-pressure associated gas will have the largest impact on reducing volumes of gas vented and flared and will be the most efficient pathway to achieve the proposed regulation's targeted gas capture rates.

Upstream

19.15.27.9(A) - (B) – Statewide Natural Gas Capture Requirements

A. .....The division shall calculate and publish each operator's baseline natural gas capture rate based on the operator's 2021 monthly data reported on form C-115B. In each calendar year between January 1, 2022 and December 31, 2026, the operator shall increase the percentage of natural gas captured based on the following formula: (2021 baseline loss rate) divided by five.

NMOGA supports the proposed rule's target gas capture rate of 98%; however, as drafted, the proposed rule overly complicates the approach necessary to determine a gas capture rate. As discussed elsewhere in these comments, NMOGA also proposes eliminating monthly upstream reports on a separate form C115B, in favor of continued reporting on the existing form C-115.

We look forward to working with the Division to reduce high pressure flaring by achieving the near term 2026 performance standard. As to the proposed baseline gas capture rate formula, the proposed calculation incorporates an overly complex approach. NMOGA therefore proposes that the rule, and its calculation and reporting requirements, be simplified by incorporating the gas categories and the proposed gas capture rate calculation outlined in the Chart below.

As explained elsewhere in these comments, this Chart outlines NMOGA's proposed consolidated gas categories for purposes of volume reporting and as the basis for NMOGA's proposed calculation to determine the applicable gas capture rate. The far-right column of the Chart also explains why, based on example volumes, high-pressure associated gas (15 psig or higher) should be the focus of gas capture target efforts. It also explains why NMOGA's proposed gas capture calculation is focused on sources and activities associated with those volumes, *i.e.*, Unnecessary HP Vent & Flare Gas (Lost Gas).

Specifically, NMOGA proposes that the gas capture calculation should be as follows:

$$\text{Gas Capture \% Proposal} = \frac{(Sales + Beneficial\ Use + Necessary\ HP\ Flare\ \&\ Vent)}{(Sales + Beneficial\ Use + Necessary\ HP\ Flare\ \&\ Vent + Unnecessary\ HP\ Flare\ \&\ Vent)}$$

19.15.27.8.E.(3) C-115B Consolidated Categories & Gas Capture Calculation

NMOGA Proposed Categories	Rule 27 OCD Categories (Upstream)	Include in GC Numerator	Include in GC Denominator	Measured, Calculated, or Either[1]	Example Tank Battery with 5000 BOPD Production Rate GOR=3000
Sales Gas	Sales Gas	Yes	Yes	Measured	15 MMscfd
Beneficial Use C-115 Non-Transported Disposition Code U	(i) pilot gas for combustion devices;	Yes	Yes	Either	up to 0.10 MMscfd
	(j) purge gas to test or fuel combustion devices;				
	(t) other not described above. Other benefical uses for normal operations (e.g. burners, engines) as approved by OCD				
Necessary High Pressure (HP) Flare & Vent C-115 Non-Transported Disposition Code V or F	(a) emergency;	Yes	Yes	Either	0 - 15 MMscfd
	(b) non-scheduled maintenance; less than 72 hours				
	(c) equipment malfunction by operator; less than 72 hours				
	(d) equipment malfunction by third party; less than 72 hours				
	(g) routine equipment repair and maintenance, including blowdown and depressurization; less than 72 hours				
	(p) natural gas quality that is not suitable for transportation and processing because of a high percentage of N2, O2, CO2, H2S, or other impurities;				
	New - Commissioning of new pipelines, equipment, and facilities				
	New - Flaring after processing through remote capture equipment				
	(t) other not described above. Other HP Flare & Vent as approved by OCD				
Unnecessary HP Flare & Vent (Lost Gas) C-115 Non-Transported Disposition Code V or F	(b) non-scheduled maintenance; greater than 72 hours	No	Yes	Either	0 - 15 MMscfd
	(c) equipment malfunction by operator; greater than 72 hours				
	subset of (c) Malfunction due to poor maintenance, careless operation, or other preventable equipment failure				
	(d) equipment malfunction by third party; greater than 72 hours				
	(g) routine equipment repair and maintenance, including blowdown and depressurization; greater than 72 hours				
	(o) insufficient pipeline availability or capacity;				
	(t) other not described above. Other HP Flare & Vent as approved by OCD				
Infeasable to measure or calculate with reasonable accuracy for the purposes of accounting for production or for compliance with statewide gas capture requirements In the case of "uncontrolled storage tanks", these volumes are normal operating losses regulated by NMED Not reported on C-115	(e) drilling operations;	No	No	N/A	up to 0.20 MMscfd
	(f) completion operations;			N/A	
	(h) routine downhole maintenance, including operation of workover rigs, swabbing rigs, coiled tubing units and similar specialty equipment;			N/A	
	(k) manual liquid unloading;			N/A	
	(l) bradenhead tests;			N/A	
	(m) packer leakage tests;			N/A	
	(n) uncontrolled storage tanks;			N/A	
	(q) venting in excess of the design specifications of pneumatic controllers and pumps as a result of malfunction or improper or infrequent maintenance;			N/A	
	(r) commencing on January 1, 2022, venting as a result of normal operation of pneumatic controllers and pumps, except that			N/A	
	(i) in November 2021, the operator shall report the volume of vented natural gas that it reported to a state or federal agency, as revised to include data from pneumatic controllers and pumps in use during 2021 that were not included in the 2020 report; and			N/A	
	(ii) an operator who vents or flares less than 500,000 cubic feet per year of natural gas is exempted from this subparagraph;			N/A	
	(s) thief hatches that are not properly closed or maintained; and			N/A	
	(t) other not described above. Other LP Flare & Vent as approved by the OCD			N/A	

[1]Either: while it may not be feasible or possible to measure today, future technology may make it possible

Defintitions

Beneficial Use - gas produced from leases that is used for operations and production purposes.
High Pressure (HP) Gas - for the purposes of this rule will be defined as any gas at 15 PSIG or greater.
Low Pressure (LP) Gas - for the purposes of this rule will be defined as any gas lower than 15 PSIG.
Unsuitable Gas - gas that is unable to be sold due to quality.

Gas Capture Equation: Gas Capture % Proposal =

$$\frac{(Sales + Beneficial\ Use + Necessary\ HP\ Flare\ \&\ Vent)}{(Sales + Beneficial\ Use + Necessary\ HP\ Flare\ \&\ Vent + Unnecessary\ HP\ Flare\ \&\ Vent)}$$

19.15.27.9(A) and 19.15.28.23(A) – Schedule for capture targets

(1) The following table provides examples of the formula based on a range of baseline natural gas capture rates.

Baseline Natural Gas Capture Rate	*Minimum Required Annual Natural Gas Capture Percentage Increase*
90-98%	*0-1.6%*
80-89%	*>1.6-3.6%*
70-79%	*>3.6-5.6%*
0-69%	*>5.6-20%*

NMOGA shares the Division's goal in seeing early progress towards reaching the 2026 goal. We would like to work with the Division on a less prescriptive approach to achieve this goal. As presented, the table is confusing and not consistent with the proposed baseline gas capture rate formula provided in subparagraph (A)(1), above. For example, if an operator has a baseline natural gas capture rate of 0%, then, to achieve a 98% gas capture rate by 2026, it must improve its gas capture rate by 98% over five years. The correct annual gas capture percentage increase therefore should be 19.6%, not 20% as stated in the table example.

While the table examples are potentially useful to put into context the range of annual natural gas capture percentage increases necessary for various baseline natural gas capture rates to achieve the proposed rule's gas capture target, the table calculations either should be corrected or the table deleted to avoid confusion and inconsistency.

19.15.27.9.C – Violation of the natural gas capture requirement

NMOGA recommends that OCD consider alternative means of enforcement for a failure to meet the gas capture requirement. Traditional enforcement mechanisms, such as denying an individual APD, curtailing a production allowance, or suspending or revoking an authorization to transport, likely will not effectively address the actions that may be necessary for an operator to meet the gas capture requirements, and may actually hinder the operator's actions to achieve the gas capture requirement. The gas capture requirements are complex and even the best assumptions and engineering practices may not be able to reasonably foresee all future operating and development scenarios. For example, instead of requiring all operators to develop enhanced gas management plans, that could be reserved as an additional compliance and enforcement tool to address failures to meet the gas capture percentage. In the alternative, NMOGA recommends that the Division revise this section to be consistent with the enforcement condition in 19.15.28.23(C).

Proposed Revision:

*(C) "**Violation of natural gas capture requirement.** The division may pursue any action authorized by law against an operator that does not meet a statewide natural gas capture requirement~~, including to curtail a production allowance, withhold or deny a drilling permit, suspend or revoke an authorization to transport or assess a civil penalty~~."*

Justification:

The range of penalties specifically referenced in the proposed rule are unnecessarily punitive and are not likely to effectively address the actions that may be necessary for an operator to meet the gas capture requirements.

Midstream

<u>19.15.28.23 - Statewide Natural Gas Capture Requirements:</u>

Similar to the comments offered for the upstream portion of the proposed gas capture requirements, NMOGA supports the proposed rule's target gas capture rate of 98% for midstream operators. Gas gathering systems present inherently greater complexities than upstream operations; however, as explained below, an attempt to fully incorporate those complexities into a gas balance approach as the proposed rule has adopted is unworkable.

NMOGA therefore proposes that the rule be simplified by incorporating the gas categories and the proposed baseline gas capture calculation outlined in the following midstream Chart, and in the gas balance summary analysis below.

19.15.28.22.C.(7) C-115B Consolidated Categories & Gas Capture (GC) Calculation

NMOGA Proposed Categories	Rule 28 OCD Categories (Midstream)	Include in GC Numerator	Include in GC Denominator	Measured, Calculated or Either[1]
Gas Gathered[2]	Gas Gathered	Yes	Yes	Measured
Beneficial Use Reported on C-115B	(f) pilot gas for combustion devices; (g) purge gas to test or fuel combustion devices; (o) other not described above. Other beneficial uses for normal operations (e.g. burners, engines)	No	No	Either
Necessary HP Flare & Vent Reported on C-115B	(a) emergency; (b) non-scheduled maintenance; less than 72 hours (c) equipment malfunction by operator; less than 72 hours (d) equipment malfunction by third party; less than 72 hours (e) routine equipment repair and maintenance, including blowdown; less than 72 hours (h) gathering pipeline blowdown; (j) gathering pipeline pigging; (i) gathering pipeline purging; (o) other not described above. Other HP Flare and Vent as approved by the OCD	No	No	Either
Unnecessary HP Flare & Vent (Lost Gas) Reported on C-115B	(b) non-scheduled maintenance; greater than 72 hours (c) equipment malfunction by operator; greater than 72 hours (d) equipment malfunction by third party; greater than 72 hours subset of (c) Malfunction due to poor maintenance, careless operation, or other preventable equipment failure (e) routine equipment repair and maintenance, including blowdown; greater than 72 hours	Subtracted	No	Either
Infeasable to measure or calculate with reasonable accuracy for the purposes of accounting for production or for compliance with statewide gas capture requirements In the case of "uncontrolled storage tanks", these volumes are normal operating losses regulated by NMED Not Reported on C-115B	(k) uncontrolled storage tanks; (l) venting in excess of the design specifications of pneumatic controllers and pumps as a result of malfunction or improper or infrequent maintenance; (m) commencing on January 1, 2022, venting as a result of normal operation of pneumatic controllers and pumps, except that in November 2021, the operator shall report the volume of vented natural gas that it reported to a state or federal agency, as revised to include data from pneumatic controllers and pumps in use during 2021 that were not included in the 2020 report; (n) thief hatches that are not properly closed or maintained; and	No	No	N/A

[1]Either: while it may not be feasible or possible to measure today, future technology may make it possible

Gas Capture Calculation: Gas Capture % Proposal = $\frac{(Gas\ Gathered - Unnecessary\ HP\ Flare\ \&\ Vent)}{(Gas\ Gathered)}$

[2]Gas gathered includes all gas entering the natural gas gathering system network

SPL, Inc., an independent company with expertise in measurement, was hired to delineate issues related to gas measurement uncertainty and the ability to perform a system balance. Please see the attached report, marked as Appendix D. A summary of key issues related to the capture percentage are provided below.

Midstream operations can be very complicated depending on the size and purpose of the network, interconnects between systems (both internal and external to the midstream operator), and the level of processing (including at booster stations and processing plants). An actual installed example of a gas gathering system is depicted below to demonstrate the many components of a gas network.

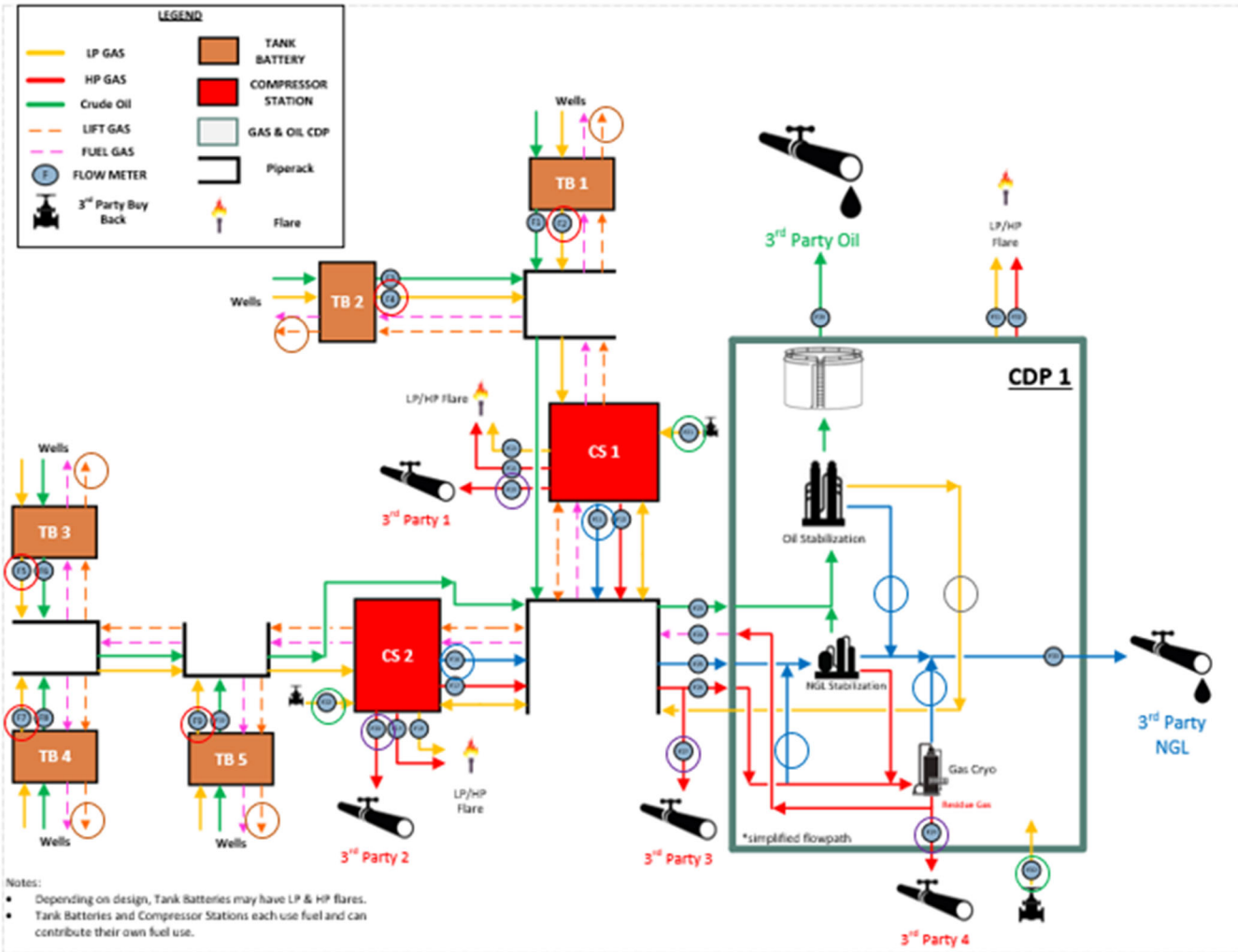

The NMOCD has proposed a simple gas balance approach to determine the gas capture percentage for midstream operations, summarized as such:

(Gas Delivered + Beneficial Lease Use + Emergency Flared or Vented)/(Gas Gathered)

The diagram demonstrates that there are many more interfaces, meters, and liquid-gas phase exchanges that must be considered to complete a balance. If the gas plant is included in this example, then the system balance equation might look something like the following:

(∑Gas Delivered + ∑Gas Lift Delivered + ∑Fuel (or Beneficial Use) + ∑Emergency Flared or Vented + ∑NGL*Equivalency Factor + ∑Condensate*Equivalency Factor + ∑Pipeline Liquid Holdup Impact + etc.)/(∑Gathered + ∑Buyback + ∑Gas from Oil Stabilizer + etc.)

The colors of the terms correspond to colored circles on the diagram identifying various metering points. Details are provided below:

- Gas Lift Delivered – gas that is compressed (and potentially processed e.g. dehydrated) by midstream and returned to the upstream for artificial lift usage.
- NGL*Equivalency Factor – as rich gas undergoes pressure and temperature changes in a pipeline, liquid hydrocarbons (predominantly propane and butane) will condense as a separate liquid phase; the equivalency factor is used to represent the need to convert liquid volumes to equivalent gas volumes; typically NGL as a term represents liquid that is formed in high pressure scrubbers of compressors or in a high pressure gas pipeline.
- Condensate*Equivalency Factor – as rich gas undergoes pressure and temperature changes in a pipeline, liquid hydrocarbons (typically pentane and higher carbon chains) will condense as a separate liquid phase; the equivalency factor is used to represent the need to convert liquid volumes to equivalent gas volumes; typically "condensate" as a term represents "pipeline drip", the liquid that condenses at low pressures between upstream locations and compressor stations.
- Pipeline Liquid Holdup Impact – pipeline liquid formation from rich gas is not a steady state process, rather liquid condenses, builds up as "holdup" in the pipeline, and is only removed once sufficient liquid accumulates that the gas velocity can sweep it out or a pigging operation is complete; thus any balance must account for the changing liquid inventory in a pipeline (this cannot be measured in situ, only determined after pigging or calculated via complicated multiphase flow simulation).
- Buyback – gas that is purchased by upstream locations or anywhere in the value chain to return gas from a midstream entity to another entity, typically for purposes such as fuel usage or compressor startup or supplemental gas lift when the wells are first starting up.
- Gas from Oil Stabilizer – this term and others in the plant represent how once in the processing plant, there are various phase changes depending on process conditions (in this case boiled off gas from a crude gathering system) that may move molecules between gas, NGL, or oil phases and must be considered.

Other impacts that may also require consideration include:

- Condensed Water – water will condense from a wet gas phase, thus changing the gas volume and leading to a liquid water phase in a pipeline depending on operating conditions.
- Dehydration – dehydration operations will remove water as well as some hydrocarbons, particularly aromatics commonly aggregated as "BTEX", thus reducing the starting gas volume further.
- Other Treating – other process equipment, sometimes used at midstream facilities prior to the processing plant, will change the composition and volume, such as amine treating to remove either CO2 or H2S.
- Interconnects – midstream companies may transfer gas between each other depending on load demand at their plants; these interconnects may move gas in and out of the system, thus requiring inclusion in either the numerator or the denominator of the capture percentage depending on net change.

NMOGA understands that, for purposes of the proposed regulation and application of Part 28 of the rule, the midstream boundary would stop at the inlet of the processing plant, which helps reduce the complexity of the system and potential sources of error, eliminating several but not all of the complex balance terms. While it is important to do, removing the plant from the balance does not, for

instance, eliminate the need to know the liquid that drops out of the gas phase in the pipeline and enters the inlet of the plant with the gas, which liquid must be measured off a slug catcher or inlet separator in order to complete the balance. The remaining terms must be included in the gas capture percentage calculation as either part of the numerator or the denominator, depending on whether they enter the system or leave the system.

With so many terms required to complete a balance, NMOGA does not believe a 98% capture requirement is realistic or attainable as currently proposed. Meter uncertainty of 2-3% is typical for custody transfer measurement under ideal conditions without liquid present. With so many meters on a system network, obtaining a calculated 98% capture rate is highly unlikely as uncertainties can be additive or cancel out. Many of these meters will have liquid present, increasing uncertainty in measurements. Plant inlet meters are historically inaccurate as they are only installed for surveillance, not custody transfer. Flare meters have even higher recognized uncertainty levels. Liquid equivalency factors vary throughout the day with pressure, ambient temperature, operating temperature, composition, and phase behavior in the pipeline. Determining such a factor and using it monthly would be unrealistic and inaccurate.

An additional complication not considered by the NMOCD is that many midstream companies transfer gas across state boundaries through gas gathering systems, with New Mexico plants processing gas from other states and vice versa.

Given the challenges in completing a system balance approach, in order to achieve a 98% gas capture rate, NMOGA recommends a simpler, realistic, and measurable midstream gas capture percentage calculation, with a focus on high-pressure associated gas, as follows:

$$\text{Gas Capture \% Proposal} = \frac{(Gas\ Gathered\ - Unnecessary\ HP\ Flare\ \&\ Vent)}{(Gas\ Gathered)}$$

In this calculation, the gas gathered is the sum total of all gas entering the network. The Unnecessary High-Pressure Flare & Vent gas is the portion of high-pressure flaring and venting gas that is deemed unnecessary (see chart, above) and is considered "lost". With this approach, there is no need to track liquid dropout or many of the other terms required for doing an in/out balance. However, such an approach cannot be used to determine actual lost and unaccounted gas in the pipeline network (which typically occurs purely due to the complexity of measurement and phase change between gas and liquid pipelines and compression facilities). But, with a focus on high-pressure associated gas, this approach is designed to target the largest volumes.

A more complicated gas capture percentage calculation for midstream operations would require a significant reduction in the capture target to account for the substantial uncertainty inherent to so many terms and complexities.

It should be noted that such complications in performing a gas capture percentage calculation are more applicable to midstream operations than to upstream operations. In upstream locations, "gas

produced" is typically not measured. Rather, produced gas is the summation of the sales gas, the flared gas, and the beneficial lease use gas. Furthermore, networks within an upstream location (*e.g.*, a tank battery) are much simpler and do not include as many inlets and outlets as a midstream network, all with potentially very different gas compositions depending on the upstream operators and what formations from which they are primarily producing. Tank batteries and wellsite facilities may also be less likely to have significant processing equipment (*e.g.*, dehydration) that changes the gas composition and phase behavior between the various gas streams. In other words, if the beneficial lease use gas, sales gas, and flare gas compositions are fairly similar, then achieving higher capture percentages with some certainty is more likely than for midstream, where the stream composition changes dramatically moving from battery to plant.

SECTION 8

ALARM (Advanced Leak and Repair Monitoring) Provides a Creative Method to Help Operators Reach the 98% Capture Requirement but Requires Some Revisions to be Workable.

Both upstream and midstream support the use of ALARM technology to further reduce lost natural gas with certain modifications suggested below. Based upon the knowledge gained by employing this technology, NMOGA suggests including a timeline for field verification. Also, it must be acknowledged that while some leaks can be identified and isolated, *i.e.*, cut off from the source of gas flow, other leaks must be repaired because gas must flow through that equipment or portion of a facility. Therefore, the suggestions below reflect time frames and considerations for differences between leaks that can be isolated and those that require repair. Finally, NMOGA requests greater credits toward the gas capture targets and a longer period over which to use them because doing so will substantially incentivize companies to implement and use ALARM technology more frequently, reducing the unintended loss of natural gas.

In addition, the ten percent additional credit provided in **Parts 27.9.B.(6)(c)** and **28.23.B(5)(c)** should be removed. While NMOGA appreciates the Division's innovative use and application of alternative technology as a means to incentivize the identification and mitigation of leaks, encouraging an operator to inform on their competition in order to obtain an additional 10 percent towards meeting the 98 percent gas capture target is ill advised and fraught with implementation issues, and has the potential to give rise to adverse impacts. As written, the concept suffers from a lack of specificity and, assuming the Division intends to use this information for enforcement, places potentially insurmountable burdens on operators to provide evidence to rebut information submitted by a competitor. Credible information that may be the basis for enforcement must be scientifically reliable, legally defensible, and subject to defined methods of detection and reporting. If not removed, these draft provisions must be substantially revised to address the following concerns:

1. "Credible Information" is not a defined term. The Division must define or otherwise put guardrails around this term so that information submitted is scientifically reliable, legally defensible, and subject to defined methods of detection and reporting. Technology to detect emissions is evolving (*e.g.*, satellites, flyovers, drones, etc.). The oil and gas industry has partnered with vendors, NGOs, and academic institutions to assess the usefulness of such new technology. However, as discussed in the "Leak Detection and Repair" technical paper prepared during the MAP process, some of these alternative methods of detection are not yet capable of providing reliable data that can be used to determine compliance. New technologies have shown great promise in detecting emissions at a lower cost but there is generally a trade off in terms of the technology's detection limit and its ability to pinpoint the location of a leak on a facility component level. Regardless of the method of detection, it is critical to understand how to use the technology and ensure it is properly functioning and calibrated so that the resulting data is reliable and replicable. Users must document how the method was used, confirm the tool was working correctly and accurately calibrated, and demonstrate a chain of custody. Without establishing at least some minimum criteria for what may constitute "Credible Information," the burden of proof for credibility is a low and easy threshold to meet, allowing almost any type of data submitted by a competitor to serve as an accusation of non-compliance by the Division. This low-bar threshold has the potential to impose a significant burden on operators, in terms of time and resources, to investigate and respond to potentially frivolous and unsubstantiated allegations.

2. The proposed rule also is likely to result in adverse consequences. For example, operators needing additional credit to meet their gas capture plan requirements may be motivated to collect data through means that could create unsafe situations that jeopardize their safety and well-being, as well as that of the unaffiliated operators' employees and contractors. During state and federal regulatory/enforcement agency inspections, an operator representative must be allowed to accompany the trained, experienced inspector.

3. While the proposed rule provides that operators must provide the ALARM data to the unaffiliated operator and the Division within five days of "discovery" of a leak at a well or gas gathering line, it fails to provide procedural details for that data and notice is to be provided. What is required to be in the notice? How is it to be delivered to an unaffiliated operator? Will the data be included? Assuming the unaffiliated operator receives the information, what is the operator expected to do with the information? Conduct an inspection? If yes, how soon? What if the operator does not act? Is that a violation? What is the Division's plan for responding to notices and how will the Division determine the data is credible? Must an unaffiliated operator act before learning if the Division considers the information to be credible? How would an unaffiliated operator verify the information is credible? What if the notice mis-identifies the location of the leak, must an unaffiliated operator prove that no leak occurred? What if the leak location is properly identified but cannot be confirmed by the unaffiliated operator?

4. If it is the Division's intention to use this information to challenge an unaffiliated operator's certification of compliance with their gas capture requirements--potentially resulting in the suspension or revocation of their authorization to operate, or production curtailment-- then the Division must develop criteria for how the information is collected, how it will be verified, and ensure that all relevant information and data, including potentially exculpatory information, are timely provided to the unaffiliated operator and that there is sufficient opportunity to refute the allegations. The Division should look to the program established by the Texas Commission on Environmental Quality (TCEQ) in the complaints protocol.[2] The TCEQ program establishes criteria and procedures for the collection of information that may be used by TCEQ in enforcement. TCEQ requires the use of agency protocols, procedures or guidelines when collecting and submitting information or evidence, proper chain of custody and, perhaps most importantly, does not presume a violation upon receipt of information or evidence. Instead, the agency will evaluate the information and require the person submitting the information to authenticate the information and participate in an enforcement hearing if one is necessary and thus be subject to cross-examination. It is incumbent on the Division to determine if information is credible, and that responsibility should not be delegated to unsuspecting operators.

For the reasons outlined above, NMOGA recommends that the following changes to the proposed rules:

19.15.27.9.B. Accounting. *No later than ~~45 days~~ April 30th ~~after January 1~~, 2022 and each year thereafter, the operator shall submit a report certifying compliance with the statewide gas capture requirements. The operator's volume of vented and flared natural gas shall be counted as produced natural gas and excluded from the volume of natural gas sold or used for beneficial use in the calculation of its statewide natural gas capture requirements, except for the following.*

(1) *The operator may exclude from the volume of produced natural gas the volume of vented and flared natural gas pursuant to Subparagraph (a) of Paragraph (3) of Subsection E of 19.15.27.8 NMAC for which the operator timely filed, and the division approved, a form C-129.*

(2) *Subject to the division's approval, the operator may exclude natural gas from the volume of produced natural gas, specifically Subparagraph (p) of Paragraph (3) of Subsection E of 19.15.27.8 NMAC, provided that the operator identified the volume of natural gas, the reasons that the operator vented or flared the natural gas rather than capturing it and any other relevant information requested by the division.*

(3) *Subject to the division's approval, the operator may exclude natural gas that is beneficially used from the volume of produced natural gas, specifically Subparagraph (r) of Paragraph (3) of Subsection E of 19.15.27.8 NMAC, provided that the operator identified the volume of vented natural gas, the reasons that the operator vented the natural gas rather than capturing it and any other relevant information requested by the division.*

(4) *The operator may obtain a credit against its reported volume of lost natural gas by using a ~~division-approved~~reliable ALARM technology to monitor, discover, report, isolate ~~and~~ or make repairs to prevent leaks of natural gas. To obtain a credit, the operator shall*

(a) *~~use~~ establish a monitoring plan that includes the use of ALARM technology at least two times per calendar year and execute the plan, as written;*

(b) *make the initial discovery using the ALARM technology; and*

(c) *isolate the leak of natural gas from ~~its own well~~the source within 48 hours ~~of discovery~~ of field verification and make the repair as necessary or mitigate within 30 ~~15~~ days of discovery.*

(5) *The operator may use on its C-115 no more than once in any ~~13~~24 month period following the division's approval of such credit.*

(6) *The credit shall be determined as follows:*

(a) *a credit of ~~thirty~~ fifty percent of the volume of lost natural gas discovered and managed in accord~~s~~ with paragraph 3 above. ~~and isolated within 48 hours of discovery and timely repaired if the leak occurs at the operator's well or production facilities~~;*

(b) *an additional credit of ten percent of the volume of lost natural gas if the operator uses ALARM technology no less than four times per year; and*

~~***(c)*** *an additional credit of ten percent of the volume of lost natural gas if the operator uses ALARM technology and, as a result of such use, provides credible information to an unaffiliated operator and the division that the unaffiliated operator's well has a leak of natural gas within five business days of discovery.~~

(7) *To obtain a credit, the operator shall submit an application to the division describing*

(a) *the ALARM technology used;*

~~***(b)*** *the date of monitoring, discovery, isolation and repair;*~~

~~***(c)*** *the estimated volume of the natural gas lost and isolated after the date of discovery;*~~

~~***(d)*** *a summary of the actions the operator took to isolate and repair the leak;*~~

~~***(e)*** *visual documentation of the discovery and isolation;*~~

~~***(f)*** *a certification that the operator did not know or have reason to know of the leak of natural gas before the discovery using ALARM technology;*~~

~~***(g)*** *if applicable, the dates of each use of the ALARM technology; and*~~

~~***(h)*** *if applicable, a copy of the information provided to the unaffiliated operator.*~~

(b) the date of use of the ALARM technology, date of leak discovery, date of notification to the owner or operator, date of field verification, and date of isolation and/or repair or mitigate;

(c) the estimated volume of the natural gas leak as reported by the ALARM technology and the annualized volume of the leak.
(d) a summary of the actions taken to isolate and/or repair the leak;
(e) a certification or other documentation that the owner or operator isolated and/or repaired the leak;
~~*(f) a certification that the owner or operator did not know or have reason to know of the leak of natural gas before the discovery using ALARM technology;*~~
Justification: It is not practical to certify that we didn't know or have reason to know something.

(8) A credit shall be used only if approved by the division, and only by the operator, and cannot be traded or used by another operator. An application for a credit shall be deemed approved 30 days after submittal to the agency, if the agency has not provided a specific denial of the application or specific questions to address completeness of the requirements of the application as defined above in 19.15.27.9.B(7).

19.15.28.23.B. Accounting. *The operator's volume of vented and flared natural gas shall be counted as gathered natural gas and excluded from the volume of natural gas delivered or used for beneficial use in the calculation of its statewide natural gas capture requirements, except for the following*

(1) No later than ~~45 days after January 1~~April 30th, 2022 and each year thereafter, the operator shall submit a report certifying compliance with the statewide gas capture requirements. The operator may exclude from the volume of produced natural gas the volume of vented and flared natural gas pursuant to Subparagraph (a) of Paragraph (7) of Subsection C of I 9. I 5.28.22 NMAC for which the operator timely filed, and the division approved, a form C-129.

(2) Subject to the division's approval, the operator may exclude natural gas that is beneficially used from the volume of produced natural gas, specifically Subparagraph (m) of Paragraph (7) of Subsection C of 19.15.28.22 NMAC, provided that the operator identified the volume of vented natural gas, the reasons that the operator vented the natural gas rather than capturing it and any other relevant information requested by the division.

(3) The operator may obtain a credit against its reported volume of lost natural gas by using a ~~division-approved~~reliable ALARM technology to monitor, discover, report, isolate, ~~and~~ make repairs and/or mitigate to prevent leaks of natural gas. To obtain a credit, the operator shall

(a) establish a monitoring plan that includes the use of ALARM technology at least two times per calendar year and execute the plan, as written;
(b) make the initial discovery using the ALARM technology; and
(c) isolate the leak of natural gas from its own natural gas gathering system until repaired. The surveying entity shall notify the owner or operator within 2 business days of discovery of a leak, the owner or operator shall field verify the leak within 2 business days of being notified, and the leak shall be isolated within 48 hours of field verification. If isolation is not possible, the leak shall be repaired or mitigated within 30 days of field verification. ~~discovery and make the repair within 15 days of discovery.~~

(4) Following the division's approval of a credit, the credit will be valid for use to offset an operator's reported volume of lost natural gas in the annual Gas Capture report once in the following 24 months. ~~The operator may use a credit against its reported volume of lost natural gas no more than once in any 13-month period following the division's approval of such credit.~~

(5) The credits shall be determined as follows:

(a) a credit of fifty percent of the leak volume will be approved if the leak is discovered

and managed consistent with the requirements of paragraph 3 above. The leak volume discovered by an ALARM technology will be annualized in order to calculate the credit used in the annual Gas Capture report~~a credit of thirty percent of the volume of natural gas discovered and isolated within 48 hours of discovery and timely repaired if the leak occurs at the operator's natural gas gathering system;~~

(b) an owner or operator can apply an additional credit of ten percent to leaks discovered during a calendar year for each additional use of ALARM technology during the same calendar year as the leak discovery, up to a maximum credit of 100% of the annualized leak volume. ~~an additional credit often percent if the operator uses ALARM technology no less than four times per year;~~

~~(c) an additional credit of ten percent credit if the operator uses ALARM technology, and as a result of such use, provides credible information to an unaffiliated operator and the division that the unaffiliated operator's natural gas gathering system has a leak of natural gas within five business days of discovery.~~

(6) To obtain a credit, the operator shall submit an application to the division describing

(a) the ALARM technology used;

~~(b) the date of monitoring, discovery, isolation and repair;~~

~~(c) the estimated volume of the natural gas lost and isolated after the date of discovery;~~

~~**(d)** a summary of the actions the operator took to isolate and repair the leak;~~

~~(e) visual documentation of the discovery and isolation;~~

~~(f) a certification that the operator did not know or have reason to know of the leak of natural gas before the discovery using ALARM technology;~~

~~(g) if applicable, the dates of each use of the ALARM technology; and~~

~~(h) if applicable, a copy of the information provided to the unaffiliated operator.~~

(b) the date of use of the ALARM technology, date of leak discovery, date of notification to the owner or operator, date of field verification, and date of isolation and/or repair;

(c) the estimated volume of the natural gas leak as reported by the ALARM technology and the annualized volume of the leak.

(d) a summary of the actions taken to isolate and/or repair the leak;

(e) a certification or other documentation that the owner or operator isolated and/or repaired the leak; and

(~~f) a certification that the owner or operator did not know or have reason to know of the leak of natural gas before the discovery using ALARM technology.~~

Justification: It is not practical to certify that we didn't know or have reason to know something.

(7) A credit shall be used only if approved by the division, and only by the operator, and cannot be traded or used by another operator. An application for a credit shall be deemed approved 30 days after submittal to the agency, if the agency has not provided a specific denial of the application or specific questions to address completeness of the requirements of the application as defined above in 19.15.28.23.B(6).

<u>Section 9:</u>

The Proposed Natural Gas Management Plans (Parts 27.9.D and 28.23.D) Unnecessarily Require Submission of Proprietary Confidential Business Information and/or Trade Secrets Often Owned and Controlled by Third-Parties.

Numerous subparts of 27.9(D) and 28.23(D) require transmittal of protected trade secret information and proprietary confidential business information ("confidential information") from operators or require that upstream operators obtain and disclose such confidential information owned and controlled by third-party midstream operators. Confidential information is protected from disclosure by New Mexico law. *See, e.g.*, *Pincheira v. Allstate Insurance Co.*, 2007-NMCA-094 (noting New Mexico's strong public policy of protecting the confidentiality of trade secrets and confidential commercial information); *see also* NMSA 1978, § 14-2-1 (requiring government agencies to prevent the disclosure of trade secrets and confidential business information from an IPRA request).

This places an untenable burden on the Division to segregate, maintain, and protect the requested confidential information without any substantial regulatory benefit or apparent necessity. The proposed regulation includes no protocol or mechanism by which the Division will segregate, maintain, and protect the confidential information required to be provided. Furthermore, the draft rules require upstream operators to certify the accuracy of, and provide information regarding, protected confidential information owned and controlled by third-party midstream operators. This creates an impossible situation for upstream operators who have no control over or knowledge of the protected confidential information. Parts 27.9(D) and 28.23(D) as drafted places both operators and the Division at risk of unlawfully disclosing confidential information. As drafted, the proposed rule also effectively makes the timing and ultimate approval of APDs subject to the cooperation and information of third-parties over which upstream operators have no control.

NMOGA therefore proposes in many instances that the OCD either modify the information required to exclude confidential information or allow the upstream or midstream operators to maintain the information for on-site review by OCD. In addition, OCD must revise the rules to exclude requirements for operators to obtain and provide access to confidential information owned and controlled by third parties. The specific provisions improperly seeking confidential information are identified below.

Further, NMOGA proposes that if operators meet the gas capture targets identified in 19.15.27.9(A)(1), then the only information that they should be required to submit as part of a natural gas management plan is the information specified in 19.15.27.9(D)(2)(a) - (e)(iv). This information alone is sufficient to allow the Division to confirm that an operator has continued to appropriately plan for production off-take from new wells.

NMOGA further offers the following comments on specific provisions of the proposed rules.

Part 27.9.D(2): (Natural Gas Management Plan)

For reference and to place the foregoing comments into context, the following table identifies by provision, the origin of the information required by this proposed regulation:

19.15.27.9.D	Origin of Information	
(2) The natural gas management plan shall describe the actions that the operator will take at each well to meet its statewide natural gas capture requirements, reduce waste, eliminate venting and flaring of natural gas to the greatest extent possible and maximize the efficient, safe and economic recovery of the state's oil and natural gas, and include the following information for each well:	**Upstream Operator**	**Midstream Gatherer**
(a) operator's name;	x	
(b) name, API number, location and footage;	x	
(c) drilling, completion and anticipated first production date;	x	
(d) anticipated natural gas volume production in units of MCFD annually for the **first three years of production**;	x	
(e) existing natural gas gathering system contracted or anticipated to contract to gather the natural gas, including	x	
(i) natural gas gatherer's name;		x
(ii) name and location of the natural gas gathering system;		x
(iii) distance in feet of pipeline required to connect to the natural gas gathering system;		x
(iv) name and location of the natural gas processing plant contracted or anticipated to contract to process the natural gas;		x
(v) maximum daily capacity of the natural gas pipeline and compressors;		x
(vi) current throughput of the natural gas pipeline and compressors;		x
(vii) anticipated daily capacity of the natural gas pipeline and compressors on the date of first sale;		x
(viii) anticipated throughput of natural gas pipeline and compressors on the date of first sale;		x
(ix) reliability of the natural gathering system, including the average annual system downtime; and		x
(x) other issues and expansion plans affecting the gathering of natural gas in the general area;		x
(f) detailed map depicting each existing, planned and anticipated natural gas gathering system in the general area, including		x
(i) natural gas gatherer's name;		x
(ii) gathering pipelines;		x
(iii) approximate route of gathering pipeline connecting the well to the natural gas gathering system;		x
(iv) reliability of the natural gas gathering system, including the average annual system downtime; and		x
(v) name and location of the natural gas processing plant receiving or anticipated to receive natural gas from the natural gas gathering system		x

Putting aside the issues raised by the confidential nature some of this information, NMOGA also notes the following concerns:

- *2(d) anticipated natural gas volume production in units of MCFD annually for the first three years of production;*
    - Besides constituting highly confidential proprietary business information, this type of long-term forward-looking information represents only a snapshot in time and, therefore, operators cannot anticipate changes in reservoir performance, introduction of new technologies, or any other variables that can alter the forecast.
- *2(e) existing natural gas gathering system contracted ~~or anticipated to contract~~ to gather the natural gas, including*
    - Subparts (v), (vi), (vii), (viii) require upstream operators to obtain and provide confidential business information or trade secrets owned and controlled by third-party midstream operators; however, upstream operators have no subpoena power or ability to require the cooperation or submission of the specified information from third-party operators. Moreover, the requested information represents only a snapshot in time and

is likely to substantially change between APD submission and Spud of the well. Providing snapshots of information so far in advance (2-3yrs) will erode the accuracy of what is submitted and could lead to multiple resubmissions prior to the spud of the well that the Gas Management Plan was originally submitted. There could be a lot changes on the part of the Midstream Gatherer in a 2-3yrs span that could affect capacities on their system and their ability to accommodate 100% of the Upstream Operator's gas. The repeated resubmission of a gas management plan will generate an immense Administrative burden on not only the Upstream Operators and Midstream Gatherers but also on the division to maintain and upkeep the number of changes and resubmitted Gas Management Plans by each Upstream Operator and Midstream Gatherer.

- Subpart (ix) (reliability of the natural gathering system, including the average annual system downtime) is ambiguous, providing no definition or methodology for determining "reliability," whether the "reliability" is determined based on the operation of entire gathering system or just the segments, nor does it provide what level of reliability will be deemed acceptable by the Division. This requirement further fails to account for circumstances where new natural gas gathering systems are in operation which do not have a record from which to determine "reliability."
- Subpart (x) (other issues and expansion plans affecting the gathering of natural gas in the general area) does not identify what is meant by "general area" and therefore what "other issues" and "expansion plans" may be applicable. Upstream operators have no knowledge or information regarding the development plans for various gathering systems in the "general area."

- *2(f) detailed map depicting each existing, planned and anticipated natural gas gathering system in the general area, including…*

  - The information requested in items Subparts (i), (ii), (iii) are general information and acceptable. However, the initial requirement in Subpart 2(f) to provide a "detailed map depicting existing, planned and anticipated" natural gas gathering systems in the "general area," and in items (iv) and (v) is information not readily available to upstream operators. These provisions require upstream operators to provide confidential business information or trade secrets owned and controlled by third-party midstream operators. Further, the required information represents only a snapshot in time and is likely to substantially change between the time an APD is submitted and spud of the well.

  - Subpart (iv) is ambiguous, providing no definition or methodology for determining "reliability," whether the "reliability" is determined based on the operation of entire gathering system or just the segments, nor does it provide what level of reliability will be deemed acceptable by the Division, which may not currently possess the expertise or experience to make the proper assessment. This requirement further fails to account for the potential security issues raised by requiring disclosure of detailed infrastructure information or circumstances where new natural gas gathering systems are in operation which do not have a record from which to determine "reliability."

- *2(h) options for the beneficial use of natural gas that cannot be connected to a natural gas gathering system; and if the operator determines, based on the available information at the time of submittal, that a natural gas gathering system will not be available or will not have capacity on the date of first production from the well to transport one hundred percent of the anticipated volume of natural gas produced, the operator shall submit a venting and flaring plan, with the natural gas management plan, containing a detailed analysis of the potential alternative uses for the natural gas until a gathering system is available that describes how the operator will avoid venting and flaring natural gas from the well including (i) - (viii)*
    - NMOGA supports the goal of identifying potential alternative beneficial uses for natural gas in the circumstance where a natural gas gathering system will not be available or will not have capacity on the date of first production; however, it is not feasible to require operators to place 100% of the gas to an alternative beneficial use, including gas capture, to avoid flaring from the well until a gathering system is available.
    - This provision should be modified to clarify that operators are not required to put 100% of the gas production to alternative beneficial use or to capture 100% of gas production until a gathering system is available.

MODIFY PART 27.9.D(3): *After the operator submits the natural gas management plan, if the natural gas gathering system becomes unavailable or will not have capacity to transport one hundred percent of the production from the well prior to spud, ~~no later than 30 days after becoming aware of such information,~~ the operator shall submit a revised gas management plan to the division ~~for the division's approval a revised venting and flaring plan to the division~~ containing the information specified above in Paragraph (2) of Subsection D of 19.15.27.9 NMAC.*

Justification: Current draft lacks clarity regarding the process and timing for Division review and approval of revised gas management plans. Language similar to 19.15.28.12(D) addressing timelines for Division review and deeming whether a revised plan is approved must be considered if division "approval" remains. Setting the spud date as the deadline provides a more workable timeline for submission of a revised gas management plan.

MODIFY PART 27.9.D(4) *The operator shall certify the following statements are accurate and true and complete to the best of the operator's knowledge:*

(a) the operator communicated with one or more operators of natural gas gathering systems in the general area about transporting natural gas from the well;

(b) the operator provided the assigned operator ~~each operator of a~~ of the ~~-~~natural gas gathering system which will be responsible for the disposition of volumes ~~in the general area~~ with the location; dates of drilling, completion and anticipated first production; and anticipated volume of natural gas production in units of MCFD for the first ~~three years~~year of production of the well; and

(c) the operator determined that there is or will be

(i) a natural gas gathering system in the general area with sufficient capacity to transport natural gas on the date of anticipated first production of the well;

or

(ii) a natural gas gathering system in the general area with sufficient capacity to transport natural gas during the anticipated first year of production ~~productive life of the well~~.

Justification: The upstream operator cannot go to multiple gas gatherers if they are under a dedication agreement with an existing gatherer. Imposing a requirement to do so will create contractual legal disputes. The proposed regulation also requires the upstream operator to supply another gas gatherer, with whom they have no ongoing business with, or a ~~collection~~confidentiality or agreement or gathering agreement, proprietary/confidential business information, which could put them at a competitive disadvantage. Even if the upstream operator has no existing dedication agreement in place, the requirement to essentially 'bid out' the development of the gas gathering infrastructure at the well permitting stage is unreasonable because it is too far in the future to define the system infrastructure that may be in place at the time the wells are envisioned to flow, which could be up to 2-3 years later.

The phrase "general area" is an undefined and vague term; it is unclear therefore how large the geographic area is within which an operator is required to identify gas gatherers. It is not possible to certify that there will be sufficient capacity for the "life of the well."

MODIFY PART 27.9.D(5): *The operator shall include a certification from the operator of the natural gas gathering system that is selected, awarded, or under contract to transport its gas in the general area stating that ~~each operator of a natural gas gathering system in the general area stating that~~ ….*

Justification: Submitting a certification from each operator of a gathering system in the general area will present many challenges and complications if wells are under an existing acreage dedication. No upstream operator will be comfortable putting their APD approval process in the hands of a midstream gatherer that is not contracted or responsible for the capture of their gas. There is no incentive for the midstream gatherer who is not selected or responsible for capturing the gas from the wells to submit a certification letter to enable production and sales to a direct competitor

MODIFY PART 27.9.D(6): *If the operator does not make the certifications or submit a gas management plan~~an adequate venting or flaring plan~~, or if the division determines that the operator will not have adequate natural gas takeaway capacity at the time a well will be spud, the division may*

(a) deny the APD; or

(b) conditionally approve the APD if the operator submits an incomplete gas management plan.

Justification: To provide regulatory certainty and avoid a standard of approval and timeline for approval that is vague, ambiguous, and with which it is impossible to determine compliance in advance. Operators need certainty that their rig program can continue for maximum efficiencies to be realized. This is particularly true in the current industry economic situation.

19.15.28.23 (D)

Modify Part 28.23.D(1): *For a natural gas gathering system placed into service after {effective date of rule), the operator shall file a natural gas management plan no later than 90 days prior to the date that the natural gas gathering system is placed into service. For a natural gas gathering system placed into service before {effective date of rule), the operator shall file a natural gas management plan no later than May 31, 2020. The operator shall update the natural gas management plan to reflect any changes in the natural gas gathering system on the annual anniversary date of its first filing of the natural gas management plan.*

Issues:

- The definition of "custody transfer," should be defined and consistent throughout both Part 27 & 28.
- Requiring midstream operators to provide current data and forecasts on gas volumes for every custody transfer point, however it is defined, will impose a substantial and unreasonable burden.
- If the requirement to submit this information is maintained in the rule, the information collected by the division must be kept confidential and protected against public disclosure.
- The date "May 31, 2020" is incorrect.
- A signed affidavit or certified copy of a total natural gas gathering system hydraulic model but must be kept in house and only reviewed during an audit process as it will contain highly sensitive proprietary information.

Modify Part 28.23.D(2(c): *current and anticipated volume of natural gas gathered at each custody transfer in units of MCFD within the natural gas gathering system for the next ~~three~~ year~~s~~; and*

Issues:

- The requirement to provide a three-year volume outlook is overly burdensome, requires the submission of proprietary and confidential business information, and is inherently inaccurate due to the complexity and many changes that will occur throughout a three-year time horizon.

Justification: The proposed rule should change to a volume outlook to be consistent with what is required by the upstream operator or to a one-year outlook for upcoming annual submission.

Appendix A:

OCD/NMED Comparison Table

OCD NMAC §	OCD Preliminary Draft Rule Text	NMED NMAC § or Reference	NMED: NMAC Text, Guidance Text, or Preliminary Draft Rule Text
19.15.27.7.K	K. "Malfunction" means a sudden, unavoidable failure or breakdown of equipment beyond the reasonable control of the operator that substantially disrupts operations and requires correction, but does not include a failure or breakdown that is caused entirely or in part by poor maintenance, careless operation or other preventable equipment failure or breakdown.	20.2.7.7.E NMAC	"Malfunction" means any sudden and unavoidable failure of air pollution control equipment or process equipment beyond the control of the owner or operator, including malfunction during startup or shutdown. A failure that is caused entirely or in part by poor maintenance, careless operation, or any other preventable equipment breakdown shall not be considered a malfunction.
19.15.27.7.M	M. "Natural gas" means a gaseous mixture of hydrocarbon compounds, primarily composed of methane, and includes both casinghead gas and gas as defined in 19.15.2 NMAC.	19.15.2.7.G(6) NMAC	“Gas well” means a well producing gas from a gas pool, or a well with a gas-oil ratio exceeding 100,000 cubic feet of gas per barrel of oil producing from an oil pool.
19.15.27.8.B(1)	(1) The operator shall capture or combust natural gas escaping from the well using best available control technologies.	20.2.74.7.K NMAC	"Best available control technology (BACT)" means an emissions limitation (including a visible emission standard) based on the maximum degree of reduction for each regulated pollutant which would be emitted from any proposed major stationary source or major modification, which the secretary determines is achievable on a case-by-case basis. This determination will take into account energy, environmental, and economic impacts and other costs. The determination must be achievable for such source or modification through application of production processes or available methods, systems, and techniques, including fuel cleaning, clean fuels, or treatment or innovative fuel combustion techniques for control of such pollutants. In no event shall application of best available control technology result in emissions of any pollutant which would exceed the emissions allowed by any applicable standard under 40 CFR Parts 60 and 61. If the department determines that technological or economic limitations on the application of measurement methodology to a particular emissions unit would make the imposition of an emissions standard infeasible, a design, equipment, work practice, operational standard, or combination thereof, may be prescribed instead to satisfy the requirement for the application of best available control technology. Such standard shall, to the degree possible, set forth the emissions reduction achievable by implementation of such design, equipment, work practice, or operation, and shall provide for compliance by means which achieve equivalent results.
19.15.27.8.B(2)	(2) A flare stack shall be located at a minimum of 100 feet from the nearest surface hole location and shall be enclosed and equipped with an automatic ignition system or continuous pilot.	20.2.50.15.C(1)(b)(iii) 20.2.50.15.C(1)(b)(iv)	(iii) Any new flare constructed or re-constructed after the effective date of this Part shall be equipped with an auto-igniter. The auto-igniter shall be installed and operational upon startup. (iv) Any existing flare constructed prior to the effective date of this Part shall be equipped with an auto-igniter no later than one year after the effective date.
19.15.27.8.C(3)	(3) The operator may route recovered natural gas to a flare if routing or using the natural gas as described in Subparagraph (2) of Paragraph C of 19.15.27.8 NMAC poses a risk to safe operation or personnel safety, provided that the flare is equipped with an automatic igniter or continuous pilot.	20.2.50.15.C(1)(b)(iii) 20.2.50.15.C(1)(b)(iv)	(iii) Any new flare constructed or re-constructed after the effective date of this Part shall be equipped with an auto-igniter. The auto-igniter shall be installed and operational upon startup. (iv) Any existing flare constructed prior to the effective date of this Part shall be equipped with an auto-igniter no later than one year after the effective date.

OCD NMAC §	OCD Preliminary Draft Rule Text	NMED NMAC § or Reference	NMED: NMAC Text, Guidance Text, or Preliminary Draft Rule Text
19.15.27.8.D(2)(a)	(a) to the extent authorized by a valid federally enforceable air quality permit issued by the environment department;	20.2.70 NMAC 20.2.72 NMAC 20.2.74 NMAC	20.2.70: Title V Operating Permit 20.2.72: GCP-O&G General Construction Permit (20.2.72.220), Streamline Permit for Compressor Stations (20.2.72.300) 20.2.74: Prevention of Significant Deterioration
19.15.27.8.D(2)(c)(ii)	(ii) for liquids unloading by manual purging, when the operator remains present on-site until the end of unloading, takes all reasonable actions to achieve a stabilized rate and pressure at the earliest practical time and takes all reasonable actions to minimize venting to the maximum extent practicable;	20.2.50.17.B(2)	(2) Owners and operators of natural gas wells shall use the following best management practices during manual liquids unloading to minimize emissions, consistent with well site conditions and good engineering practices: (a) Reduce wellhead pressure prior to blowdown; (b) Monitor manual liquids unloading in close proximity to the well or via remote telemetry; and (c) Close all well head vents to the atmosphere and return the well to normal production operation as soon as practicable.
19.15.27.8.D(2)(d)(ii)	(ii) loading out liquids from a storage tank or other low-pressure production vessel to a transport vehicle;	20.2.50.20.B(1)	(1) Owners and operators of all existing and new liquid transfer operations subject to 20.2.50.20 NMAC shall use vapor balance, vapor recovery, or control VOC emissions by 98% or greater using vapor combustion when transferring liquids from storage tanks to transfer vessels, or when transferring liquids from transfer vessels to storage tanks.
19.15.27.8.D(3)(b)	(b) conduct the AVO inspection weekly on a well with an average daily production greater than 10 barrels of oil or 60,000 cubic feet of natural gas;	20.2.50.16.C(2)(a) 20.2.50.23.C(2)	(a) Owners or operators shall conduct an audible, visual, and olfactory (AVO) inspection of each thief hatch, closed vent system, pump, compressor, pressure relief device, open-ended valve or line, valve, flange, connector, piping, and any associated equipment to identify defects and leaking components at least weekly as follows: (2) The owner or operator of any storage tank subject to control requirements shall conduct an auditory, visual, and olfactory (AVO) inspection on a weekly basis. Any time the storage tank is unloaded less frequently than weekly, the AVO inspections shall be conducted prior to the storage tank being unloaded.
19.15.27.8.D(3)(c)	(c) conduct the AVO inspection once per calendar month, with at least 20 calendar days between inspections, on a well with an average daily production equal to or less than 10 barrels of oil or 60,000 cubic feet of natural gas; and	20.2.50.6.C 20.2.50.8.LL.	C. Equipment located at stripper wells, as defined in 20.2.50.8 NMAC, is exempt from the requirements of this Part 50, except as specified in 20.2.50.25 NMAC. LL. “Stripper well” means an oil well with a maximum daily average oil production not exceeding 10 barrels of oil per day, or a natural gas well with a maximum daily average natural gas production not exceeding 60,000 standard cubic feet per day, or a well with a maximum daily average combined oil and natural gas production not exceeding 10 barrels of oil equivalent per day during any 12-month consecutive time period.

OCD NMAC §	OCD Preliminary Draft Rule Text	NMED NMAC § or Reference	NMED: NMAC Text, Guidance Text, or Preliminary Draft Rule Text
19.15.27.8.D(3)(d)	(d) make and keep a record of each AVO inspection for not less than five years and make such record available for inspection by the division upon request.	20.2.50.16.C(2)(a)(iv) 20.2.50.16.D(1)(b) 20.2.50.16.E(2)	(iv) Any positive audible, visual, or odorous indication shall be considered a leak. All AVO leaks shall be tagged with a visible tag and reported to management or designee within three calendar days. (b) All leaks detected using optical gas imaging shall be repaired within 7 days of discovery, all other leaks shall be repaired within 15 days of discovery; (2) Owners or operators subject to 20.2.50.16.C NMAC shall keep records of the following for all AVO, RM21, and OGI inspections conducted as required under 20.2.50.16.C NMAC: SEE RULE FOR LIST OF REQUIREMENTS
19.15.27.8.D(4)(a)	(a) notify the division of the venting or flaring by email as soon as possible, but no more than two hours following discovery of the venting or flaring;	20.2.7.110.A NMAC	(1) Initial report: the owner or operator shall file an initial report, no later than the end of the next regular business day after the time of discovery of an excess emission that includes all available information for each item in Subsection B of 20.2.7.110 NMAC. (2) Final report: the owner or operator shall file a final report that contains specific and detailed information for each item in Subsection B of 20.2.7.110 NMAC, no later than ten (10) days after the end of the excess emission.
19.15.27.8.D(5)(a)	(a) The operator shall design a temporary or permanent separation or storage tank to minimize the natural gas flashing and vapor accumulation.	20.2.50.23.A(1)	(1) All new and existing hydrocarbon storage tanks with an uncontrolled potential to emit equal to or greater than 2 tpy of VOC and located at wellhead sites, tank batteries, gathering and boosting sites, natural gas processing plants, and transmission compressor stations are subject to regulation under 20.2.50.23 NMAC.
19.15.27.8.D(5)(b)	(b) The operator shall equip a permanent storage tank associated with production operations that is installed after {effective date of rule} with an automatic gauging system to reduce the venting of natural gas.	20.2.50.23.B(7)	(7) Owners and operators of an existing or new tank with a thief hatch shall install a control device on the thief hatch which allows the thief hatch to open sufficiently to relieve overpressure in the tank and to automatically close once the tank overpressure is relieved. The thief hatch shall be equipped with a manual lock-open safety device to ensure positive hatch opening during times of human ingress. The lock-open safety device will only be engaged during in the presence of owner or operator staff and during active ingress activities.
19.15.27.8.D(5)(c)	(c) The operator shall combust all natural gas in a flare stack designed for and operated at maximum efficiency	20.2.50.15.C(1)(a)	(a) The flare shall combust all gas sent to the flare. Owners and operators shall not send gas to the flare in excess of the flare's maximum rated capacity.
19.15.27.8.D(5)(c)	(i) A flare stack installed after May 31, 2021 shall be equipped with an automatic ignitor or continuous pilot.	20.2.50.15.C(1)(b)(iii) 20.2.50.15.C(1)(b)(iv)	(iii) Any new flare constructed or re-constructed after the effective date of this Part shall be equipped with an auto-igniter. The auto-igniter shall be installed and operational upon startup. (iv) Any existing flare constructed prior to the effective date of this Part shall be equipped with an auto-igniter no later than one year after the effective date.
19.15.27.8.D(5)(c)(ii)	(ii) A flare stack before June 1, 2021 shall be retrofitted with an automatic ignitor or continuous pilot no later than 18 months after {effective date of rule).	20.2.50.15.C(1)(b)(iv)	(iv) Any existing flare constructed prior to the effective date of this Part shall be equipped with an auto-igniter no later than one year after the effective date.

OCD NMAC §	OCD Preliminary Draft Rule Text	NMED NMAC § or Reference	NMED: NMAC Text, Guidance Text, or Preliminary Draft Rule Text
19.15.27.8.D(5)(c)(iii)	(iii) A flare stack located at a well with an average daily production of equal to or less than 10 barrels of oil or 60,000 cubic feet of natural gas shall be retrofitted with an automatic ignitor or continuous pilot if the flare stack is replaced after {effective date of the rule}.	20.2.50.6.C 20.2.50.8.LL.	C. Equipment located at stripper wells, as defined in 20.2.50.8 NMAC, is exempt from the requirements of this Part 50, except as specified in 20.2.50.25 NMAC. LL. "Stripper well" means an oil well with a maximum daily average oil production not exceeding 10 barrels of oil per day, or a natural gas well with a maximum daily average natural gas production not exceeding 60,000 standard cubic feet per day, or a well with a maximum daily average combined oil and natural gas production not exceeding 10 barrels of oil equivalent per day during any 12-month consecutive time period.
19.15.27.8.D(5)(e)	(e)The operator shall inspect a flare stack at least once per week to confirm that it is being properly maintained and operated in conformance with its design, and shall make and keep a record of each inspection for not less than five years and make such records available for inspection by the division upon request.	20.2.50.15.B(4)	(4) Owners and operators shall inspect all air pollution control equipment used to control emissions from equipment subject to emission standards under this Part at least monthly to ensure proper maintenance and operation. Each EMITT inspection or monitoring event shall be initially scanned and the required monitoring data shall be electronically captured during the monitoring event.
19.15.27.8.E(3)(b)	(b) non-scheduled maintenance;	20.2.7	Unpermitted emissions from upsets/malfunctions must be reported according to 20.2.7 NMAC
19.15.27.8.E(3)(c)	(c) equipment malfunction by operator;	Guidance	The GCP allows operators to permit up to 10 tpy VOC for Malfunction activities. *See* GCP Registration Form; *See also* "Guidance for Submittal of Startup, Shutdown, and Maintenance Emissions in Permit Applications."
19.15.27.8.E(3)(d)	(d) equipment malfunction by third party;	20.2.7	Unpermitted emissions from upsets/malfunctions must be reported according to 20.2.7 NMAC
19.15.27.8.E(3)(g)	(g) routine equipment repair and maintenance, including blowdown and depressurization;	Guidance	The NOI allows operators to authorize 10 TPY VOC due to Startup, Shutdown and Maintenance Activities. (*See* NOI Oil and Gas Quick Application; *See* "Guidance for Submittal of Startup, Shutdown, and Maintenance Emissions in Permit Applications.") The GCP allows operators to permit emissions due to Startup, Shutdown, and Maintenance (SSM) Activities. (*See GCP Registration Form; See also "Guidance for Submittal of Startup, Shutdown, and Maintenance Emissions in Permit Applications.")*
19.15.27.8.E(3)(i)	(i) pilot gas for combustion devices;	Guidance	The NOI allows operators to authorize emissions from pilot gas for combustion devices. (*See* NOI Oil and Gas Quick Application). The GCP allows operators to permit pilot gas for combustion devices (*See* GCP Registration Form; *See also* Air Emission Calculation Tool.)
19.15.27.8.E(3)(k)	(k) manual liquid unloading;	20.2.50.17.C(2)	(2) Owners and operators shall calculate the volume and mass of VOC vented during each manual liquids unloading event.
19.15.27.8.E(3)(n)	(n) uncontrolled storage tanks;	Guidance	The NOI allows operators to authorize emissions from uncontrolled storage tanks. (*See* NOI Oil and Gas Quick Application; See also Air Emission Calculation Tool.). The GCP allows operators to permit emissions from uncontrolled storage tanks (*See* GCP Registration Form; *See also* Air Emission Calculation Tool.)
19.15.27.8.E(3)(p)	(p) natural gas quality that is not suitable for transportation and processing because of a high percentage of N2 or H2S;	Guidance	The GCP allows operators to permit up to 10 tpy VOC for Malfunction activities. (*See* GCP Registration Form; *See also* "Guidance for Submittal of Startup, Shutdown, and Maintenance Emissions in Permit Applications.")

OCD NMAC §	OCD Preliminary Draft Rule Text	NMED NMAC § or Reference	NMED: NMAC Text, Guidance Text, or Preliminary Draft Rule Text
19.15.27.8.E(3)(q)	(q) venting in excess of the design specifications of pneumatic controllers and pumps as a result of malfunction or improper or infrequent maintenance;	Guidance	The GCP allows operators to permit up to 10 tpy VOC for Malfunction activities. (*See* GCP Registration Form; *See also* "Guidance for Submittal of Startup, Shutdown, and Maintenance Emissions in Permit Applications.")
19.15.27.8.E(3)(r)	(r) commencing on January 1, 2022, venting as a result of normal operation of pneumatic controllers and pumps, except that	Guidance	The NOI allows operators to authorize emissions resulting from normal operation of pneumatic controllers and pumps. (*See* NOI Oil and Gas Quick Application; See also Air Emission Calculation Tool.). The GCP allows operators to permit emissions resulting from normal operation of pneumatic controllers and pumps(*See* GCP Registration Form; *See also* Air Emission Calculation Tool.)
19.15.27.8.E(3)(s)	(s) thief hatches that are not properly closed or maintained; and	Guidance	The GCP allows operators to permit up to 10 tpy VOC for Malfunction activities. (*See* GCP Registration Form; *See also* "Guidance for Submittal of Startup, Shutdown, and Maintenance Emissions in Permit Applications.")
19.15.27.8.E(4)	(4) The operator shall notify the division of any period of venting and flaring that exceeds eight hours in any 24 hour period and of all venting or flaring attributed to emergency or malfunction of any duration by submitting a form C-129 no later than 24 hours after the commencement of venting and flaring	20.2.7	Unpermitted emissions from upsets/malfunctions must be reported according to 20.2.7 NMAC

Appendix B:

Upstream C-115 Categories and Gas Capture Table

19.15.27.8.E.(3) C-115~~B~~ Consolidated Categories & Gas Capture Calculation

NMOGA Proposed Categories	Rule 27 OCD Categories (Upstream)	Include in GC Numerator	Include in GC Denominator	Measured, Calculated, or Either[1]	Example Tank Battery with 5000 BOPD Production Rate GOR=3000
Sales Gas	Sales Gas	Yes	Yes	Measured	15 MMscfd
Beneficial Use C-115 Non-Transported Disposition Code U	(i) pilot gas for combustion devices; (j) purge gas to test or fuel combustion devices; (t) other not described above. Other benefical uses for normal operations (e.g. burners, engines) as approved by OCD	Yes	Yes	Either	up to 0.10 MMscfd
Necessary High Pressure (HP) Flare & Vent C-115 Non-Transported Disposition Code V or F	(a) emergency; (b) non-scheduled maintenance; less than 72 hours (c) equipment malfunction by operator; less than 72 hours (d) equipment malfunction by third party; less than 72 hours (g) routine equipment repair and maintenance, including blowdown and depressurization; less than 72 hours (p) natural gas quality that is not suitable for transportation and processing because of a high percentage of N2, O2, CO2, H2S, or other impurities; New - Commissioning of new pipelines, equipment, and facilities New - Flaring after processing through remote capture equipment (t) other not described above. Other HP Flare & Vent as approved by OCD	Yes	Yes	Either	0 - 15 MMscfd
Unnecessary HP Flare & Vent (Lost Gas) C-115 Non-Transported Disposition Code V or F	(b) non-scheduled maintenance; greater than 72 hours (c) equipment malfunction by operator; greater than 72 hours subset of (c) Malfunction due to poor maintenance, careless operation, or other preventable equipment failure (d) equipment malfunction by third party; greater than 72 hours (g) routine equipment repair and maintenance, including blowdown and depressurization; greater than 72 hours (o) insufficient pipeline availability or capacity; (t) other not described above. Other HP Flare & Vent as approved by OCD	No	Yes	Either	0 - 15 MMscfd
Infeasable to measure or calculate with reasonable accuracy for the purposes of accounting for production or for compliance with statewide gas capture requirements In the case of "uncontrolled storage tanks", these volumes are normal operating losses regulated by NMED Not reported on C-115	(e) drilling operations;	No	No	N/A	up to 0.20 MMscfd
	(f) completion operations;			N/A	
	(h) routine downhole maintenance, including operation of workover rigs, swabbing rigs, coiled tubing units and similar specialty equipment;			N/A	
	(k) manual liquid unloading;			N/A	
	(l) bradenhead tests;			N/A	
	(m) packer leakage tests;			N/A	
	(n) uncontrolled storage tanks;			N/A	
	(q) venting in excess of the design specifications of pneumatic controllers and pumps as a result of malfunction or improper or infrequent maintenance;			N/A	
	(r) commencing on January 1, 2022, venting as a result of normal operation of pneumatic controllers and pumps, except that			N/A	
	(i) in November 2021, the operator shall report the volume of vented natural gas that it reported to a state or federal agency, as revised to include data from pneumatic controllers and pumps in use during 2021 that were not included in the 2020 report; and			N/A	
	(ii) an operator who vents or flares less than 500,000 cubic feet per year of natural gas is exempted from this subparagraph;			N/A	
	(s) thief hatches that are not properly closed or maintained; and			N/A	
	(t) other not described above. Other LP Flare & Vent as approved by the OCD			N/A	

[1]Either: while it may not be feasible or possible to measure today, future technology may make it possible

Defintitions

Beneficial Use - gas produced from leases that is used for operations and production purposes.
High Pressure (HP) Gas - for the purposes of this rule will be defined as any gas at 15 PSIG or greater.
Low Pressure (LP) Gas - for the purposes of this rule will be defined as any gas lower than 15 PSIG.
Unsuitable Gas - gas that is unable to be sold due to quality.

Gas Capture Equation: Gas Capture % Proposal =

$$\frac{(Sales + Beneficial\ Use + Necessary\ HP\ Flare\ \&\ Vent)}{(Sales + Beneficial\ Use + Necessary\ HP\ Flare\ \&\ Vent + Unnecessary\ HP\ Flare\ \&\ Vent)}$$

Appendix C:

Midstream C-115B Categories and Gas Capture Table

19.15.28.22.C.(7) C-115B Consolidated Categories & Gas Capture (GC) Calculation

NMOGA Proposed Categories	Rule 28 OCD Categories (Midstream)	Include in GC Numerator	Include in GC Denominator	Measured, Calculated or Either[1]
Gas Gathered[2]	Gas Gathered	Yes	Yes	Measured
Beneficial Use Reported on C-115B	(f) pilot gas for combustion devices;	No	No	Either
	(g) purge gas to test or fuel combustion devices;			
	(o) other not described above. Other beneficial uses for normal operations (e.g. burners, engines)			
Necessary HP Flare & Vent Reported on C-115B	(a) emergency;	No	No	Either
	(b) non-scheduled maintenance; less than 72 hours			
	(c) equipment malfunction by operator; less than 72 hours			
	(d) equipment malfunction by third party; less than 72 hours			
	(e) routine equipment repair and maintenance, including blowdown; less than 72 hours			
	(h) gathering pipeline blowdown;			
	(j) gathering pipeline pigging;			
	(i) gathering pipeline purging;			
	(o) other not described above. Other HP Flare and Vent as approved by the OCD			
Unnecessary HP Flare & Vent (Lost Gas) Reported on C-115B	(b) non-scheduled maintenance; greater than 72 hours	Subtracted	No	Either
	(c) equipment malfunction by operator; greater than 72 hours			
	(d) equipment malfunction by third party; greater than 72 hours			
	subset of (c) Malfunction due to poor maintenance, careless operation, or other preventable equipment failure			
	(e) routine equipment repair and maintenance, including blowdown; greater than 72 hours			
Infeasable to measure or calculate with reasonable accuracy for the purposes of accounting for production or for compliance with statewide gas capture requirements In the case of "uncontrolled storage tanks", these volumes are normal operating losses regulated by NMED Not Reported on C-115B	(k) uncontrolled storage tanks;	No	No	N/A
	(l) venting in excess of the design specifications of pneumatic controllers and pumps as a result of malfunction or improper or infrequent maintenance;			
	(m) commencing on January 1, 2022, venting as a result of normal operation of pneumatic controllers and pumps, except that in November 2021, the operator shall report the volume of vented natural gas that it reported to a state or federal agency, as revised to include data from pneumatic controllers and pumps in use during 2021 that were not included in the 2020 report;			
	(n) thief hatches that are not properly closed or maintained; and			

[1]Either: while it may not be feasible or possible to measure today, future technology may make it possible

Gas Capture Calculation: Gas Capture % Proposal = $\frac{(Gas\ Gathered - Unnecessary\ HP\ Flare\ \&\ Vent)}{(Gas\ Gathered)}$

[2]Gas gathered includes all gas entering the natural gas gathering system network

Appendix C:

SPL Report

SPL

Oil & Gas Production Technology

NMOGA
Proposed Rule 18.15.28 Review
September 15th, 2020
Final Report 1.01

Table of Contents

Table of Contents 1
Index of Figures 2
Index of Tables 3
Navigating the report: 3
Section 1: Proposed Rule - General Overview 4
Section 2: General Introduction – Natural Gas Gathering Systems 5
Boundary of the gathering system 5
Section 3: Orifice Metering Uncertainty 7
Gathering System Inlet Meters 7
Flare Measurement 13
Section 4: Natural gas phase changes 14
Summer 14
Winter 17
Section 5: Liquid Measurement – Field Sales & Pipeline liquid drop out 20
Drip Truck Measurement 20
Liquid Measurement – Pigging 21
Section 6: Field treating operations 23
Section 7: Natural gas plant inlet meters 24
Section 8: Summary 27
Section 9: References and Resources 28

Index of Figures

Figure 1 Gathering system diagram 5
Figure 2 Orifice flange union and paddle plate 8
Figure 3 Universal orifice plate in holder 9
Figure 4 Orifice meter run 1 – OFU with no flow conditioning – old installation 9
Figure 5 Orifice meter run 2 – OFU with no flow conditioning 10
Figure 6 Orifice meter run 3 – single chamber fitting with no flow conditioning 10
Figure 7 Orifice meter run 4 – single chamber fitting with no flow conditioning 10
Figure 8 Orifice meter run 5 – single chamber fitting with straightening vanes 11
Figure 9 Orifice meter run 6 – single chamber fitting with straightening vanes 11
Figure 10 Orifice meter run 7 – single chamber with flow conditioner and liquid drop out 12
Figure 11 Orifice meter run 8 - single chamber with flow conditioning 12
Figure 12 Orifice meter run 9 - dual chamber with flow conditioning 12
Figure 13 HCDP Curve - example of summer natural gas composition 15
Figure 14 HCDP curve - summer analysis during early fall cold front 16
Figure 15 HCDP Curve - example of winter natural gas composition 18
Figure 16 Drip truck loading - initial reading at drip pot 20
Figure 17 Drip truck loading - final reading at drip pot 20
Figure 18 Error % due to operating at low DP 24
Figure 19 Plant inlet meter - paddle plant on 16" line 25
Figure 20 Plant inlet meter - paddle plate and gauge lines 25
Figure 21 API 14.3.1, Figure 1-6 beta ratio uncertainty 26

Index of Tables

Table 1 Gas Composition and flowing conditions - summer 14
Table 2 Carlsbad, NM Weather Forecast Temperatures - September8th to 12th, 2020 15
Table 3 Volumes of gathering system – phase changes in summer 16
Table 4 Gas Composition and flowing conditions - winter 17
Table 5 Ambient Temperatures - Average and Records - Carlsbad, NM 18
Table 6 Volumes of gathering system – phase changes in winter 19
Table 7 Drip loading - composition and volumes 21

Navigating the report:

Hyperlinks are used in the "Table of Contents", "Index of Figures", and "Index of Tables". If you hover over an item and click it will take you to the item.

Hover over the header of a section, click and it will return you to the "Table of Contents".

Hover over the header of a table, click and it will return you to the "Index of Tables".

Hover over the footer of a figure, click and it will return you to the "Index of Figures".

Hover over the header of a subsection, click and it will return you to the top of the section.

Section 1: Proposed Rule - General Overview

Rule 19.15.28 is being proposed to regulate natural gas gathering systems in NM. One portion of the rule pertains to natural gas capture requirements. By December 31, 2026, the operator of a gathering system is required to capture 98% of the natural gas gathered. The goal is to reduce the annual volume of vented and flared natural gas.

To calculate the natural gas capture percent, the volumes of various streams must be measured or estimated.

$$\frac{\text{(Natural gas delivered) + (Consumed for beneficial use) + (exempted flare or vented)}}{\text{(Gathered natural gas)}}$$

The state proposed that the volume of vented and flared natural gas be counted as gathered natural gas but will be excluded from the volume of natural gas delivered or consumed for beneficial use. The proposed rule provides exemptions for emergency flaring or venting under limited circumstances. The volumes that are exempted can be added to the delivered gas volumes.

The regulations states the installed measurement for flared or vented gas shall be designed in accordance with the accuracy ratings and standards in 43 CFR 3175.29.

- The referenced document doesn't contain a section 3175.29. The reference is more than likely 43 CFR 3175.20 as shown in proposed rule 19.15.27.
- 43 CFR 3175 has been revised and is out for public comment. Since the documents are referenced in the NM regulations, it is recommended that NM postpone the comment period for these regulations until the new BLM rules are finalized.
- As the proposed rule is currently written, the ability for any operator to meet the gas capture requirement would be extremely difficult, even if the system is designed and operated without any flares or vented gas.

In the sections that follow, the mains items that influence the measurement both into and out of the system will be discussed. The goal of the paper is to provide information on the measurement and operational complexities of a natural gas gathering system; specifically to point out areas of concern around the gas capture requirement.

Section 2: General Introduction – Natural Gas Gathering Systems

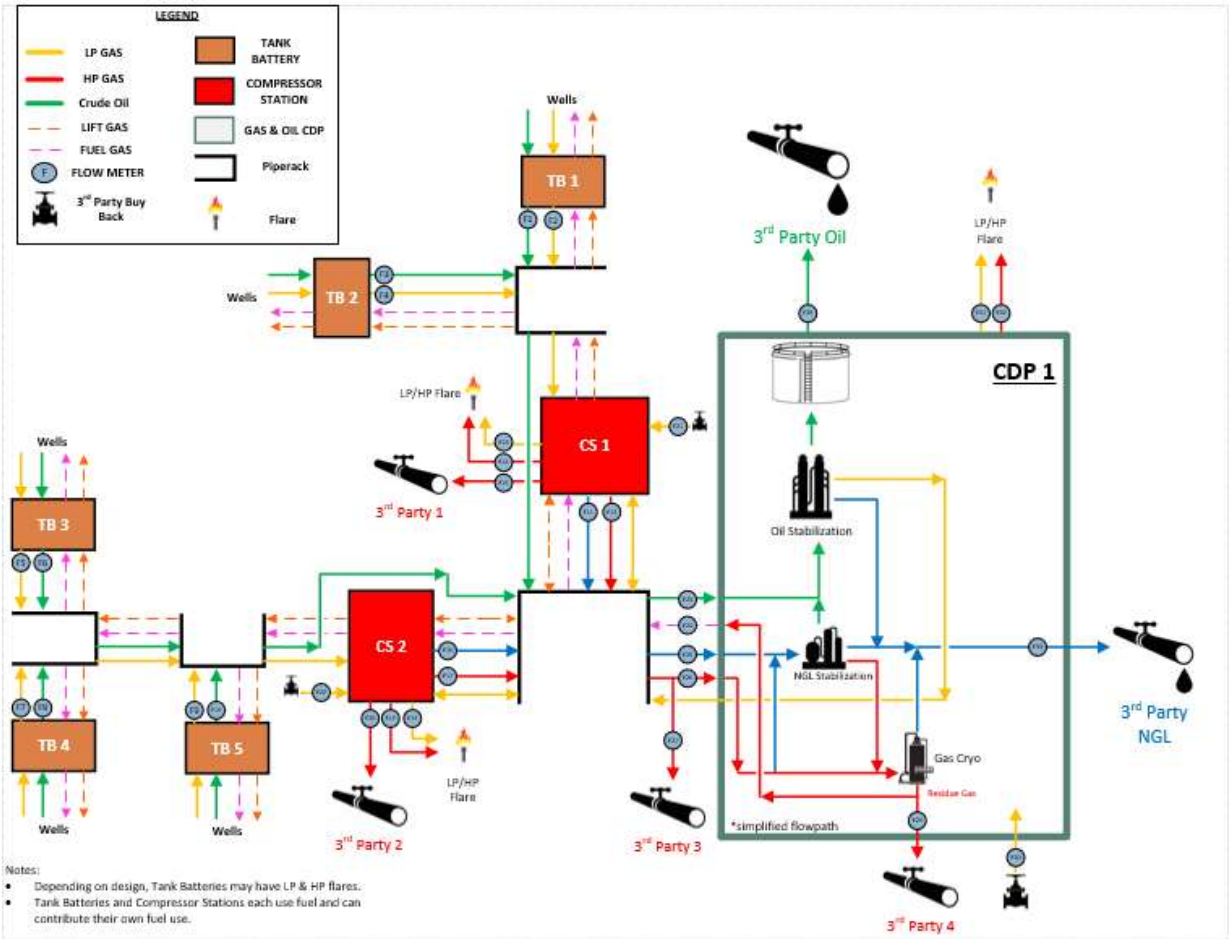

Figure 1 Gathering system diagram

In Figure 1, the diagram of a small, relatively simple gathering system is shown. Even though the system is small, the diagram shows the complexity of the movement of gas and liquid through the pipelines.

Multiple complex processes are required to gather, transport, compress, and treat natural gas. A gas gathering system can be feed by thousands of individual production facilities providing natural gas and natural gas liquids to be collected for processing at the natural gas plant. The system can consist of multiple pipeline laterals operating at different pressures, system compression and treating requirements, and methods to deliver both natural gas and natural gas liquids to the next facility of the system. A system can be a few miles of pipeline up to thousands of miles of pipeline. The complexity of each system increases as the pipeline system grows in size or in the number of facilities. Other factors add to the complexity such as interconnecting pipelines to other plants, third party inlets, third party sales, treating and compression. The complexity increases when gathering systems are interconnected to move gas between systems to optimize flow through multiple processing plants. The systems are typically dynamic with measurement points added or removed during the year.

Boundary of the gathering system

The proposed rule mentions the custody transfer meter as one termination point of both the gathering pipeline and natural gas gathering system. The rule mentions the other termination point is a connection point with a natural gas plant or other transmission or distribution system. The proposed

rule needs clarification to address certain situations such as buy back gas. Buy back gas may be removed before any of the connection points listed.
Another scenario that could occur, the gathering pipeline may have check measurement and the other party has custody measurement. If a discrepancy between the meters occurs, does the gathering pipeline have to use the volume of the third party custody meter?

Section 3: Orifice Metering Uncertainty

Definitions:

Uncertainty in 43 CFR means the range of error that could occur between a measured value and the true value being measured as a positive or negative value, calculated at a 95 percent confidence level.

Beta ratio means the measured diameter of the orifice bore divided by the measured inside diameter of the meter tube.

The current BLM regulations require flow measurement uncertainties based on the volume of gas leaving the facility. The current values are found in 43 CFR 3175.31.

- Very High Volume must achieve an overall rate of +/- 2%; greater than 1000 MCF/D
- High Volume must achieve an overall uncertainty rate of +/- 3%; between 200 and 1000 MCF/D
- Low and very low volume wells, under 200 MCF/D, have no uncertainty requirements

For many existing locations, the uncertainty listed in the BLM regulations for stations with flow less than 1000 MCF/D is greater than the gas capture percentage required by the proposed rule.

Gathering System Inlet Meters

Natural gas and natural gas liquid production starts at the wellhead, flowing though the production equipment on site. After the production equipment has separated the gas stream, the gas will be delivered to the gathering system. As the natural gas leaves the well pad, tank battery, or central delivery point (CDP), the gas will be measured by the gathering system. A sample of the natural gas will be taken on a specific frequency to determine the quality of the product. The system will have multiple inlet meters delivering natural gas into the pipeline. The majority of the gas will be measured by an orifice meter. The orifice fitting can either be an orifice flange union (OFU) using a paddle plate or a meter fitting which requires the universal orifice plate (UOP). The universal orifice plate is held by a carrier that is positioned in the orifice fitting. The orifice fitting can either be designed with a single chamber or dual chamber.

With improvements in technology and flow data testing, the American Petroleum Institute (API) requirements for meter run installation and design considerations have been revised over the years. The revisions resulted in the ability to achieve lower levels of uncertainty in gas measurement. The standard API MPMS 14.3.2, Part 2, 2000 is the culmination of thousands of data sets produced by this testing. The data indicates that there are certain inherent measurement inaccuracies developed by orifice metering systems. If the installation requirements stated by the standard are followed, these errors are considered acceptable. However, the overall accuracy of a measurement system must also include the secondary and tertiary device errors. The accuracy of the test equipment must be entered into the measurement uncertainty calculation. Introduction of additional errors due to poor installation design will result in higher measurement uncertainty. The data indicated that loss of a fully developed flow profile may produce a positive bias in measurement of flow; however if swirl is produced the bias will be negative. Errors typically range from +3 to -10%, depending on the relative amount of poor flow profile vs swirl.

Existing measurement systems installed before the latest version of API 14.3.2, Part 2, 2000 were designed around the industry accepted guidance at that time and are grandfathered by API. The guidance was based on existing standards, technology, and research available at that time. Existing installations built before the latest version of API 14.3.2, measurement bias may exist due to inadequate flow conditioning and upstream pipe lengths.

To ensure accurate flow measurement, the gas flowing through the orifice plate should have a fully developed flow profile. API MPMS 14.3.2 Tables 7, 8A, & 8B list the installation configurations tested at a flow testing facility which resulted in a fully developed flow profile. Meters installed in other configurations will have an increased amount of measurement uncertainty.

Below are photos of actual meter runs that have different installation configurations, beta ratios, flow rates, gas quality composition, flow conditioning and year the run was installed. The result is that each meter run will have a different amount of measurement uncertainty. Therefore, the denominator in the gas capture formula will be the sum of multiple meters with potentially higher levels of uncertainty than required in the regulation.

Figure 2 Orifice flange union and paddle plate

Figure 3 Universal orifice plate in holder

Figure 4 Orifice meter run 1 – OFU with no flow conditioning – old installation

The meter run in Figure 4 provides an example of an older meter run installed prior to 1970. The meter run has no flow conditioning and the RTD (resistive thermal device) used to record the gas flowing

temperature is not in the meter run. The RTD and test probe are located downstream of the check valve on the meter run. Installations such as these will have a higher amount of uncertainty. The OFU meter run installation is grandfathered by API.

Figure 5 Orifice meter run 2 – OFU with no flow conditioning

Figure 6 Orifice meter run 3 – single chamber fitting with no flow conditioning

Figure 7 Orifice meter run 4 – single chamber fitting with no flow conditioning

The meter run in figure 5 is an OFU with no flow conditioning. The OFU meter run installation is grandfathered by API. The sample point for the meter run is not in the first thread-o-let down stream of the plate as recommended by API. The meter tube is installed with two 45˚ elbows upstream and two 45˚ elbows downstream of the run.

The meter runs in figures 6 and 7 are configured with a single chamber fitting and no flow conditioning. The uncertainty at these locations will be lower than the meter run shown in figures 4 and 5. The dimensions of the meter tube and current beta ratio can be compared to Table 7 in API 14.3.2 to determine if the installation meets the requirements to provide acceptable uncertainty. In figure 6, the meter tube is installed with two 90˚ elbows upstream and two 90˚ elbows downstream of the run. In figure 7, the meter tube is installed with two 90˚ elbows upstream and one 90˚ elbows downstream of the run.

Figure 8 Orifice meter run 5 – single chamber fitting with straightening vanes

Figure 9 Orifice meter run 6 – single chamber fitting with straightening vanes

The meter runs in figures 8 and 9 are configured with a universal orifice plate and straightening vanes for flow conditioning. The dimensions of the meter tube and current beta ratio can be compared to Tables 8A and 8B in API 14.3.2 to determine if the installation meets the requirements to provide acceptable uncertainty.

Figure 10 Orifice meter run 7 – single chamber with flow conditioner and liquid drop out

Figure 11 Orifice meter run 8 - single chamber with flow conditioning

Figure 12 Orifice meter run 9 - dual chamber with flow conditioning

The meter tubes in figures 10, 11, and 12 are designed with flow conditioners. The meter tubes must be installed per the manufactures specification to ensure the proper flow profile is flowing through the orifice plate. The meter tubes in this section are shown to provide understanding into the numerous metering installations that were built over the years.

In addition to the uncertainty, a properly designed and installed measurement system can still have measurement bias if pulsation occurs in the gas stream. Compressors used to increase pipeline pressure can produce errors in measurement due to pulsation. Orifice meters subjected to pulsating flow will record flow erratically and erroneously. Bias levels due to pulsation can be significant, even double-digit percent. Pulsation errors can exist without any indication on an orifice meter, so many pulsation errors remain undetected and uncorrected. The determination of pulsation errors requires specialized equipment designed for this purpose.

The variations in system designs, installations, beta ratios, and flow rates can influence the gas measurement bias and degree of uncertainty. For many existing locations, the uncertainty is greater than the gas capture percentage required by the proposed rule.

Flare Measurement

The proposed rules states that flare measurement will designed in accordance with 43 CFR 3175.

The OFU does not meet the centering requirement of API 14.3, Part2. Therefore, the OFU is not approved by BLM in 43 CFR 3175.

Will other measurement technologies, such as a thermal mass meter or ultrasonic flow meter, be approved in this proposed rule?

As stated earlier, the current regulations require flow measurement uncertainties based on the volume of gas leaving the facility. Some flares and vent gas stream will flow below the 200 MCF/D rate; therefore these meters will have no uncertainty requirements.

At some facilities, the flare will have erratic and non-uniform flow rates. The flare may not flow for weeks, then an upset will result in a large volume of gas diverted to the flare. A situation like this makes determination of the required uncertainty level difficult and if the meter is over-ranged the volume will not be accounted for.

Section 4: Natural gas phase changes

The natural gas stream measured at the inlet to the gathering system is delivered at specific flowing conditions for the location. For accurate measurement, the flowing stream through the meter tube should be a single phase gas stream. Under different temperature and pressures, the natural gas stream will change phase~~s~~ to a mixture consisting of gas and liquids. During normal operations, the flowing conditions of the gas stream is impacted by the ambient air temperature and operational equipment such as filters, coolers, compressors, and gas exchangers. With these changes in flowing conditions, the potential exists for a change in the vapor phase volume of the gas stream, resulting in hydrocarbon and water liquid drop out in the pipeline.

API MPMS 14.1 and GPA Midstream (Gas Processors Association) standard 2166 discuss in detail the influence of phase change when obtaining natural gas samples. These changes also occur during normal pipeline transportation of a gas stream in the system. The composition of the gas being measured can be modeled to provide a hydrocarbon dew point curve (HCDP) of the gas. The HCDP curve indicates the temperature and pressure regions where the composition input will be either a natural gas vapor, natural gas liquid (NGL), or a two phase combination of natural gas vapor and NGL.

By reviewing the HCDP curve generated by the lab analysis, the determination whether the sample obtained at the meter run was single phase can be made. For locations where spot samples are used, sampling during average weather conditions should provide the best analysis for the measurement system.

Summer

The HCDP curve below demonstrates the phase change of a gas stream exposed to temperatures below the hydrocarbon dew point. The HCDP curve is based on a typical gas analysis used for late spring, summer and early fall.

Table 1 Gas Composition and flowing conditions - summer

Location	Leaving Battery
Temperature (F)	119.8
Pressure (psig)	80 PSIG (93.2 PSIA)
Gas Rate (MMSCFD)	100
Gas HHV (MMBTU/MMSCF)	1380
Gas Composition	Mole %
Water Content	1.798
Nitrogen	0.799
CO2	0.100
Methane	71.329
Ethane	12.488
Propane	6.593
i-Butane	1.099
n-Butane	2.498
i-Pentane	0.699
n-Pentane	0.899
Hexanes	0.599

Heptanes	0.599
Octanes +	0.500

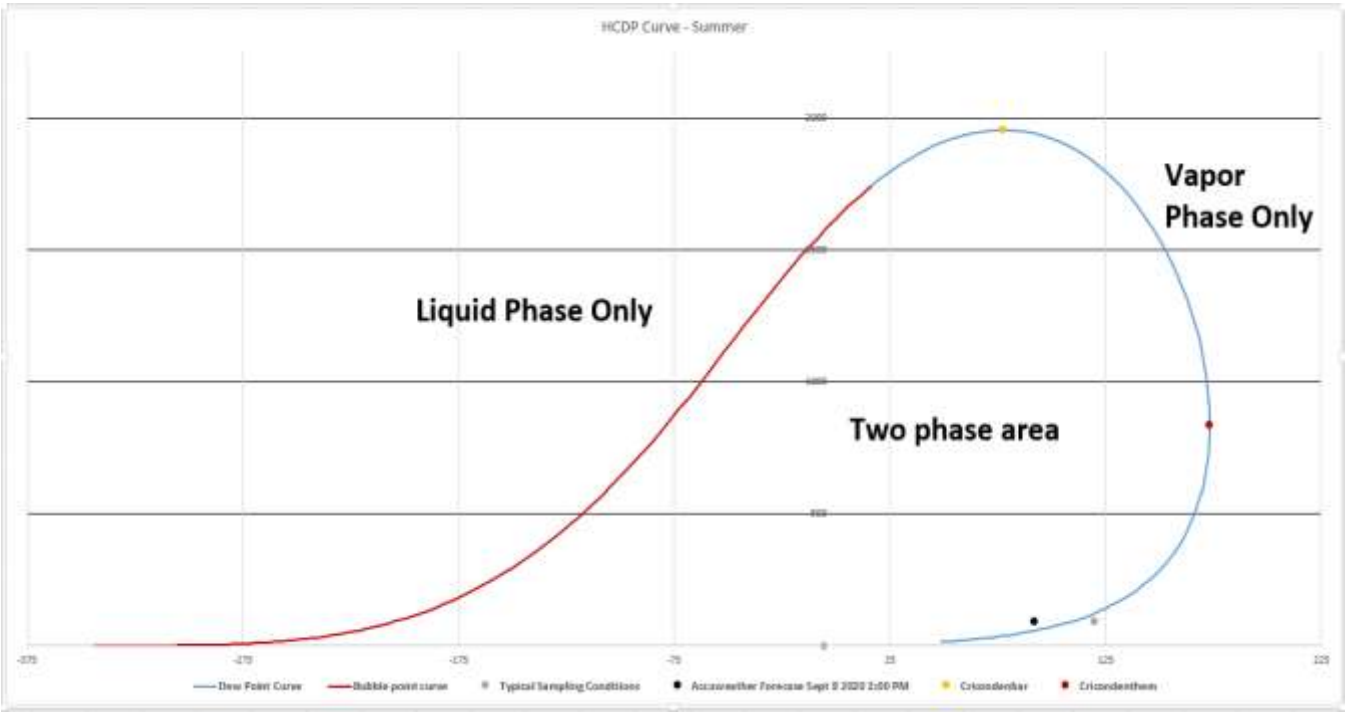

Figure 13 HCDP Curve - example of summer natural gas composition

The gray dot on the curve is the conditions at the time of sampling. The data indicates the gas in the meter run was single phase during sampling. Additionally, the curve indicates the temperature required to keep the fluid in the gas phase at the typical flowing pressure is approximately 110˚F. The table below provides the forecast temperatures for the Carlsbad, New Mexico area for days during the week of September 6th, 2020. The data was obtained from Accuweather.com.

Table 2 Carlsbad, NM Weather Forecast Temperatures - September8th to 12th, 2020

Date	Time	Forecast Temperature
8-Sep	High	92
9-Sep	Low	50
9-Sep	High	61
10-Sep	Low	58
10-Sep	High	67
11-Sep	Low	77
11-Sep	High	60
12-Sep	Low	62
12-Sep	High	84

The table above indicates that during this time frame, the flow through the production equipment and pipeline will be exposed to temperatures below the hydrocarbon dew point.

The graph below shows the original HCDP curve in blue with the stream flowing at 100% vapor. The orange dewpoint curve is calculated based on 97.5% of the flowing stream remaining in the vapor phase. Flow occurring near the conditions of the blue dew point curve are occurring in a two phase stream and measurement would indicate a 2.5% reduction of gas volume. Sampling under these conditions will produce highly variable results.

In either case, the volume to be used in the gas capture requirement will be influenced by the ambient temperatures.

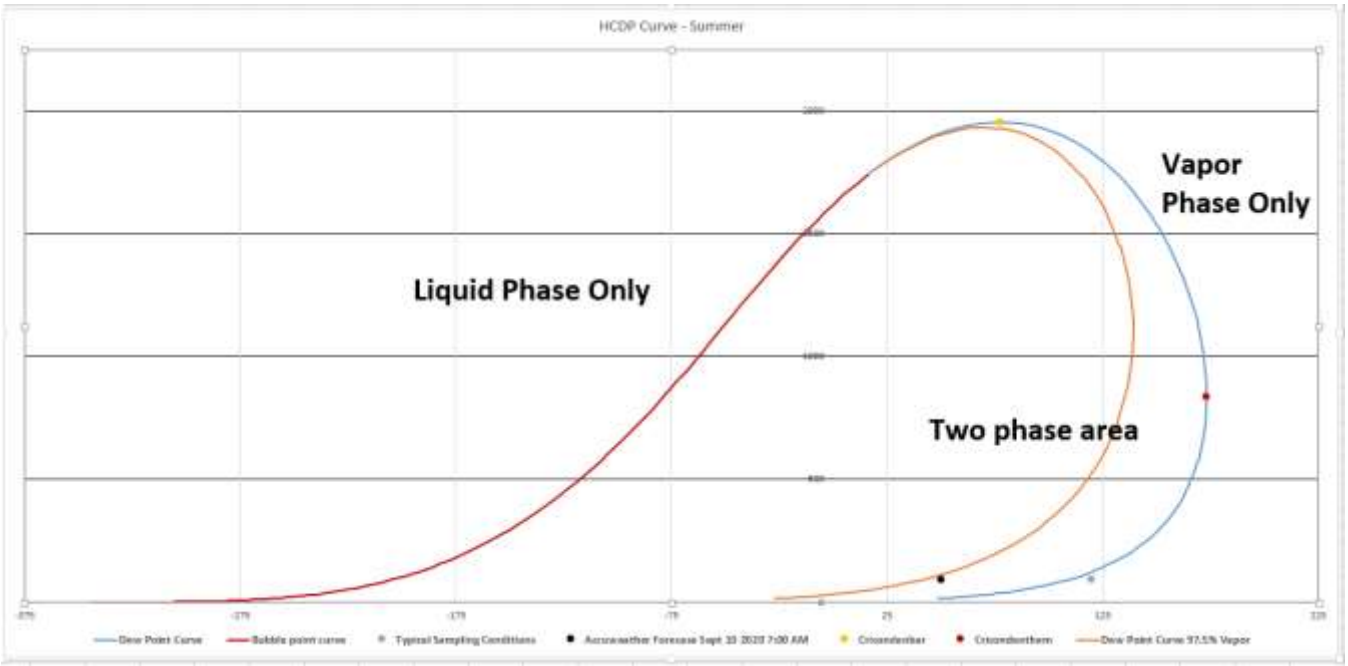

Figure 14 HCDP curve - summer analysis during early fall cold front

The analysis and typical flowing conditions were input into a phase change simulation program to determine the potential volume changes from the inlet to the gathering system to the inlet at the gas processing plant. The table below shows that for every 100 MCF entering the system as gas only 89.77 MCF will be measured as gas at the plant. The remaining 10.23 MCF of gas was converted to liquids in the pipeline.

Table 3 Volumes of gathering system – phase changes in summer

	Gas into gathering system		Gas into compressor station	Combined liquids into compressor station		Gas leaving the compressor station		Gas into the processing plant	Combined liquids into the processing plant
Vapor Frac	1.00		1.00			1.00		1.00	
T [F]	119.8		80.0	80.0		120.0		80.0	80.0
P [psia]	93.20		44.20	44.20		1213.20		1113.20	1113.20
Mole Composition	Fraction		Fraction	Fraction		Fraction		Fraction	Fraction
WATER	0.01798		0.01128	0.87132		0.00173		0.00057	0.02527
HYDROGEN SULFIDE	0.00000		0.00000	0.00000		0.00000		0.00000	0.00000
NITROGEN	0.00799		0.00805	0.00000		0.00841		0.00874	0.00174
CARBON DIOXIDE	0.00100		0.00101	0.00001		0.00103		0.00104	0.00077
METHANE	0.71329		0.71888	0.00142		0.74424		0.76515	0.31947
ETHANE	0.12488		0.12585	0.00145		0.12673		0.12541	0.15362

PROPANE	0.06593		0.06643	0.00279		0.06417		0.05973	0.15442
ISOBUTANE	0.01099		0.01107	0.00116		0.01015		0.00870	0.03947
n-BUTANE	0.02498		0.02515	0.00377		0.02248		0.01856	0.10211
ISOPENTANE	0.00699		0.00702	0.00268		0.00574		0.00411	0.03887
n-PENTANE	0.00899		0.00903	0.00446		0.00717		0.00494	0.05259
Hexanes*	0.00599		0.00596	0.01026		0.00377		0.00181	0.04357
Heptanes*	0.00599		0.00580	0.03031		0.00283		0.00093	0.04143
Octanes*	0.00500		0.00449	0.07037		0.00156		0.00032	0.02669
Total	1.00000		1.00000	1.00000		1.00000		1.00000	1.00000
Standard Liquid Volume Flow [bbl/d]				200.466					2808.901
Standard Gas Volume Flow [MMSCFD]	100.00		99.22			94.19		89.77	

At best, the natural gas capture percentage for this segment would be around 90% if only gas volumes are considered in the equation.

Winter

The hydrocarbon dew point curve below demonstrates the phase change of a gas stream exposed to temperatures below the hydrocarbon dew point. The HCDP curve is based on a typical gas analysis sampled and used for late fall, winter, and early spring.

Table 4 Gas Composition and flowing conditions - winter

Location	Leaving Battery
Temperature (F)	82
Pressure (psig)	80 PSIG (93.2 PSIA)
Gas Rate (MMSCFD)	100
Gas HHV (MMBTU/MMSCF)	1343
Gas Composition	Mole %
Water Content	0.501
Nitrogen	0.902
CO2	0.100
Methane	73.748
Ethane	12.926
Propane	6.713
i-Butane	1.002
n-Butane	2.305
i-Pentane	0.501
n-Pentane	0.601
Hexanes	0.302
Heptanes	0.200
Octanes +	0.200

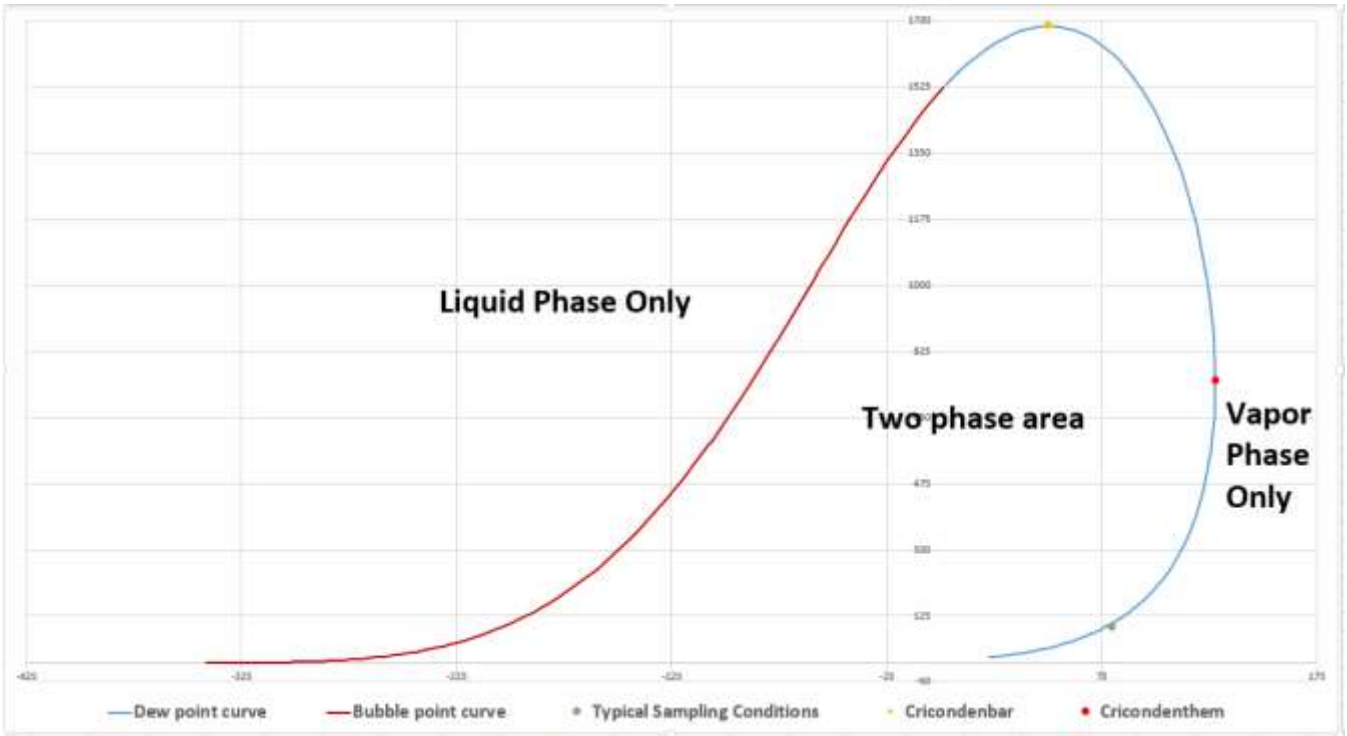

Figure 15 HCDP Curve - example of winter natural gas composition

The green dot on the curve is the conditions at the time of sampling. The data indicates the gas in the meter run was single phase during sampling. The curve indicates the temperature required to keep the fluid in the gas phase at the typical flowing pressure is approximately 80˚F. The table below provides the average and record temperatures for the Carlsbad, New Mexico area during the late fall, winter, and early spring seasons. The data was obtained from The Weather Channel.com.

Table 5 Ambient Temperatures - Average and Records - Carlsbad, NM

Month	Record High	Average High	Average Low	Record Low
October	100	78	59	21
November	97	67	48	0
December	86	58	36	-4
January	88	58	28	-16
February	100	63	28	-17
March	98	70	32	9
April	101	79	38	23
May	109	87	56	31

As the table indicates, the locations in this part of New Mexico have been exposed to a variance of ambient temperature over 117˚F in the month February. The temperature swings in the table above illustrates the complexity of one component that influences the gas gathering companies in the attempt to meet the natural gas capture requirement.

The analysis and typical flowing conditions were input into a phase change simulation program to determine the potential volume changes from the inlet to the gathering system to the inlet at the gas processing plant. The table below shows that for every 100 MCF entering the system as gas only

90.79 MCF will be measured as gas at the plant. The remaining 9.21 MCF of gas was converted to liquids in the pipeline.

Table 6 Volumes of gathering system – phase changes in winter

	Gas into gathering system		Gas into compressor station	Combined liquids into compressor station		Gas leaving the compressor station		Gas into the processing plant	Combined liquids into the processing plant
Vapor Frac	1.00		1.00			1.00		1.00	
T [F]	92.0		50.0	80.0		120.0		80.0	80.0
P [psia]	93.20		44.20	44.20		1213.20		1113.20	1113.20
Mole Composition	Fraction		Fraction	Fraction		Fraction		Fraction	Fraction
WATER	0.00501		0.00392	0.69114		0.00053		0.00021	0.00634
HYDROGEN SULFIDE	0.00000		0.00000	0.00000		0.00000		0.00000	0.00000
NITROGEN	0.00902		0.00903	0.00001		0.00932		0.00971	0.00235
CARBON DIOXIDE	0.00100		0.00100	0.00002		0.00101		0.00102	0.00089
METHANE	0.73748		0.73864	0.00391		0.75547		0.77633	0.38633
ETHANE	0.12926		0.12946	0.00472		0.12865		0.12565	0.18175
PROPANE	0.06713		0.06722	0.01002		0.06394		0.05759	0.17618
ISOBUTANE	0.01002		0.01003	0.00404		0.00902		0.00731	0.03923
n-BUTANE	0.02305		0.02306	0.01383		0.02021		0.01564	0.10100
ISOPENTANE	0.00501		0.00500	0.00830		0.00398		0.00258	0.02872
n-PENTANE	0.00601		0.00600	0.01328		0.00465		0.00290	0.03563
Hexanes*	0.00301		0.00297	0.02573		0.00179		0.00073	0.02062
Heptanes*	0.00200		0.00191	0.05600		0.00088		0.00023	0.01222
Octanes*	0.00200		0.00174	0.16900		0.00055		0.00009	0.00874
Total	1.00000		1.00000	1.00000		1.00000		1.00000	1.00000
Standard Liquid Volume Flow [bbl/d]				66.745					3048.892
Standard Gas Volume Flow [MMSCFD]	100.00		99.84			95.92		90.79	

At best, the natural gas capture percentage for this segment would be around 90% if only gas volumes are considered in the equation.

In summary, gas measured into a gathering system will be subject to phase changes, which would require accounting for this effect. The proposed rule does not address this in the gas capture requirement formula.

Section 5: Liquid Measurement – Field Sales & Pipeline liquid drop out

Drip Truck Measurement

The liquid hydrocarbons drop out in the pipeline may be removed by a drip truck. The volume of drip removed is determined by a gauge or level indicator on the side of the truck. Typically, a drip truck will load a series of drip pots then transfer the liquids to either a compressor station or plant. The liquids will be offloaded into separators to allow venting of light ends or directly into a sales tank.

Figure 16 Drip truck loading - initial reading at drip pot

Figure 17 Drip truck loading - final reading at drip pot

The process to determine the amount of fluid loaded can lead to measurement errors and uncertainty.

- The truck needs to be leveled front to back and side to side to ensure the float is positioned properly.
- The driver must read the gauge at the same level every time to ensure no angles lead to misreading the gauge.
- A representative sample from each drip pot must be procured and analyzed to provide the composition to convert the liquid volume to MCF.

The gauge on this truck has sixteen divisions for the volume. The truck volume is 80 barrels. Each gauge point is 5 barrels, which can be used to determine the uncertainty associated with reading the volume of fluid loaded on the truck. As the truck travels from one drip pot to the next, the level of product in the truck can change due to thermal changes in ambient temperature, increasing the uncertainty of the measured liquid volume.

The table below is an example of the loading of 4 drip tanks on one truck where samples were taken at each drip pot. The calculated volume of each component loaded was compared to the calculated volume that was off loaded at the facility. The table indicates that light ends were either over estimated in the field, the amount of volume loaded was not estimated correctly, light ends were lost during the process, or light components were recovered by a vapor recovery system but not measured.

Table 7 Drip loading - composition and volumes

	Drip 1	Drip 2	Drip 3	Drip 4	Offloaded Compositions	Calculated Loaded Volume		Offloaded Volume	Difference in barrels
	LV %					Barrels			
Nitrogen	0.003	0.007	0.000	0.021	0.022	0.004		0.011	0.006
Methane	0.018	0.057	0.048	0.035	0.009	0.024		0.004	-0.020
CO2	0.000	0.000	0.000	0.000	0.000	0.000		0.000	0.000
Ethane	0.236	0.472	0.317	0.391	0.088	0.205		0.042	-0.162
Propane	2.082	3.273	2.519	3.548	1.385	1.531		0.665	-0.866
i-Butane	1.940	1.912	1.989	2.772	1.329	1.011		0.638	-0.373
n-Butane	7.313	6.805	7.846	10.782	5.564	3.758		2.671	-1.087
i-Pentane	7.581	5.083	7.123	9.523	5.521	3.067		2.650	-0.417
n-Pentane	11.568	7.600	11.306	14.322	8.789	4.654		4.219	-0.435
Hexanes Plus	69.259	74.791	68.852	58.606	77.293	33.747		37.101	3.354
Barrels, Oil	6	29	6	7	48	48.000		48.000	
Cu. Ft./Gallon	24.696	24.836	25.066	25.791	24.441				

Even when the drip volumes are included in the gas capture requirement, the process of measuring and converting the drip volumes back to a MCF basis has multiple steps that complicate the ability to meet the natural gas capture requirement of 98%.

Liquid Measurement – Pigging

In sections 19.15.28.18 (D), 19.15.28.19 (B)(4), 19.15.28.20 (C)(1) and (C)(2), 19.15.28.22 (B)(3)(i) and (C)(7) – the proposed rule mentions the procedure of pigging the pipeline. The procedure is performed to clean the pipeline and push liquids in the pipeline to slug catchers or tanks at a gathering facility.

Operators of gathering systems routinely run pipeline pigs to sweep out liquid dropout and fluids collected in the pipeline. Typically, the fluids will be collected at a compressor station or the natural gas processing plant in a specific surge tank. The volume of fluid collected is determined by reading the tank levels before and after the pig fluid arrives at the plant.

Many operations have a vent line on the top of the tank that routes vapors from the surge tank back to the inlet header to the 1st stage of compression. Many locations do not measure this gas as part of an internal balance. This is an example of liquid phase hydrocarbons transitioning back to the gas phase. The vapors may not be measured resulting in recovered gas volumes that would not be represented in the gas capture percentage.

The volume of the remaining liquids from the pigging operation may be measured at the surge tank, however it is not unusual for the liquids to continue through the processing plant without measurement. Although not allowed in formula at this time, the liquid volumes need to be converted back to be the MCF basis to be accounted for as gas captured.

To perform the conversion, the physical properties of the liquid must be known to accurately generate a cubic foot/gallon constant. The process to determine the value has complications. One main complication is when to obtain the sample to analyze for the conversion constant. As the pig brings liquids into the tank, the lighter components tend to vaporize at a faster rate. As the fluids stabilize in the tank, the amount of light component flashing slows. Depending upon when the sample is taken, it has a potential of not being representative of the liquids in the pipeline.

It is recommended that the natural gas capture formula be review and revised to include the volume of hydrocarbons recovered as liquid and adjusted for the additional sources of uncertainty involved in the conversion back to MCF.

Another item to mention concerning field liquids is pipeline liquid holdup. As the hydrocarbons drop out, whether in drips or in the pipeline, the volume could be looked at as inventory. Unless each system is pigged and all liquids removed on December 31st, the liquids in the pipeline will change the volumes used in the gas capture calculation resulting in a bias in the data used for an annual gas capture percentage report.

Section 6: Field treating operations

The natural gas stream measured at the inlet to the gathering system can be comprised of various compounds that can corrode a pipeline under certain conditions. Some gas gathering systems will inject chemicals to prevent the corrosion while other systems will treat the gas at a booster or compressor station. The most common components removed from the gas stream will be water vapor, CO2, H2S and other sulfur compounds. Besides being corrosive, these compounds are contaminants that can result in the natural gas and natural gas liquids being off specification and non-merchantable.

The industry provides multiple methods to remove these components of the gas stream that will be required to market the gas or natural gas liquids. Although the methods are different, all the methods will reduce the MCF of the gas stream due to removal of components measured at the gathering inlet meter. The gas removed from the pipeline is necessary for the delivery of the gas at the next point of processing or for final delivery of the gas.

The gas removed by the treating systems is typically flared or combusted on site. The proposed rule mentions venting or flaring during the normal operation of a dehydration unit, but the venting or flaring during removal of the other components is not mentioned. It is recommended the proposed rule be revised to account for the deduction of the gas volume resulting from the removal of all non-merchantable compounds such as CO2 and H2S.

Section 7: Natural gas plant inlet meters

Typically, the inlet meters at compressor stations and gas plants are not used for fiscal accounting, but to provide quick information about the operational conditions of the system. The measurement systems at these stations are designed to minimize back pressure on the gathering system and some can be operated at high beta ratios. The composition and flow rate through the meters can vary during daily operations.

One drawback of attempting to keep back pressure low is the flow through many the plant inlet meters will be in lower range of the differential pressure transmitter span. Significant measurement errors will occur when the differential pressure is less than 10% of the calibrated span of the differential recording device and the lower the differential, the higher the percent of error occurs when corrections are to be made.

If a 1" calibration error is present:

A meter flowing at 80" of differential pressure, the error in flow rate will be 0.6%.

The same system flowing at 5"of differential pressure, the error is 10.6% of flow.

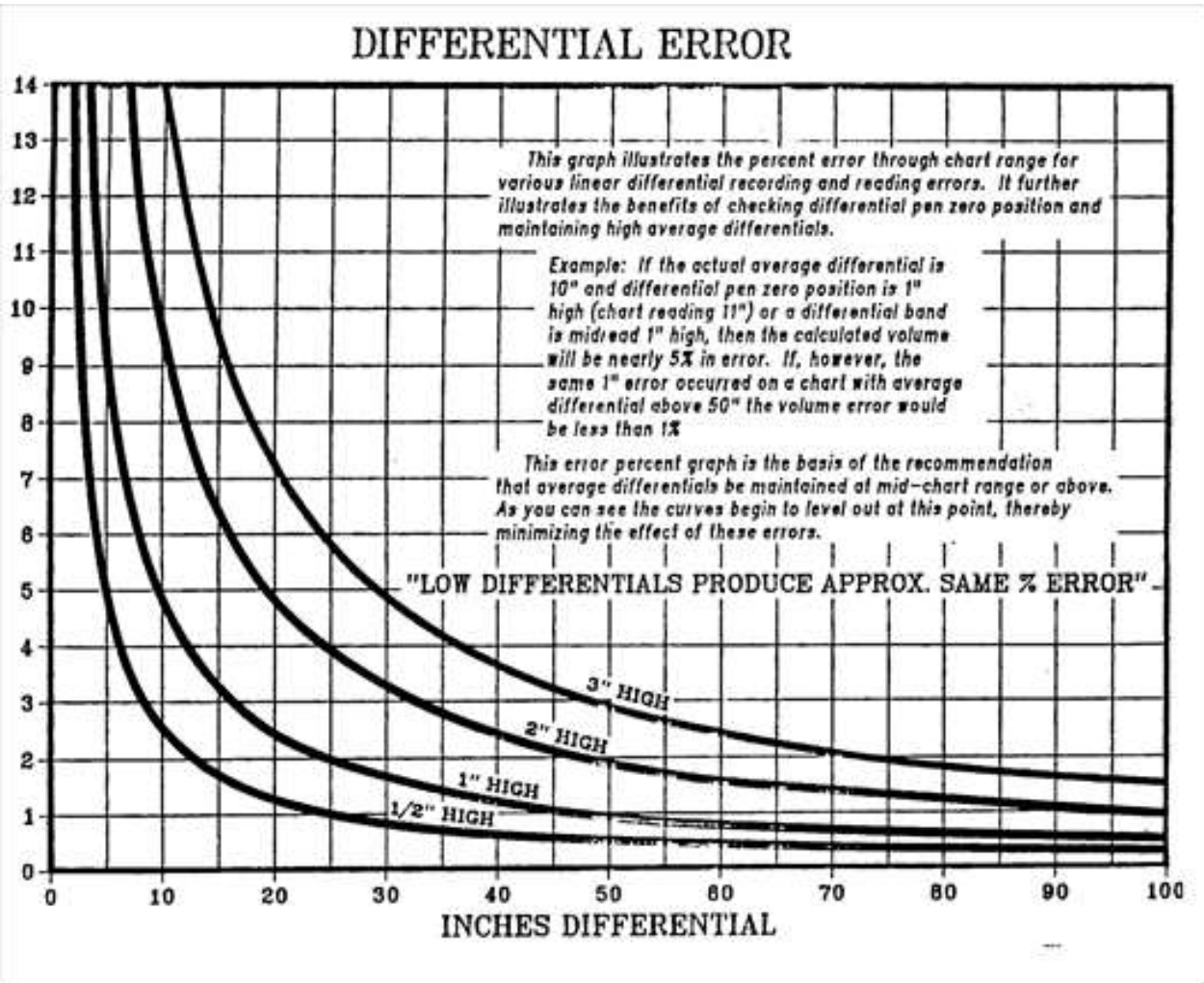

Figure 18 Error % due to operating at low DP

Some locations use paddle plates in these measurement stations. The condition of the plate can't be checked except during plant turn arounds. The location of the OFU may be located in pipe racks or under walk ways. The result is long runs of gauge lines and potential for liquid dropout in the gauge

lines. These factors increase the uncertainty of the volume of gas measured at inlet to the gas plant or compressor stations.

Note: The age of the facility has an influence on the type of metering installed and the uncertainty that will be attributed with the measurement.

Figure 19 Plant inlet meter - paddle plant on 16" line

Figure 20 Plant inlet meter - paddle plate and gauge lines

The API standard is based on a beta ratio of 0.1 to 0.75. Minimum uncertainty of the orifice plate coefficient of discharge is achieved with a beta ratio on 0.2 to 0.6 and an orifice bore size greater than or equal to 0.450". Generally, selection of an orifice plate with a bore size that results in a differential pressure between 10% - 90% of the calibrated span is good practice. Gas flow through a meter run that has a wide swing in flow rates can show significant measurement errors during the low flow periods due to the low DP readings.

The orifice plate should be routinely inspected to verify the condition of the plate complies with API 14.3.2. A plate which doesn't meet the requirements will lead to either measurement bias, increased measurement uncertainty, or both.

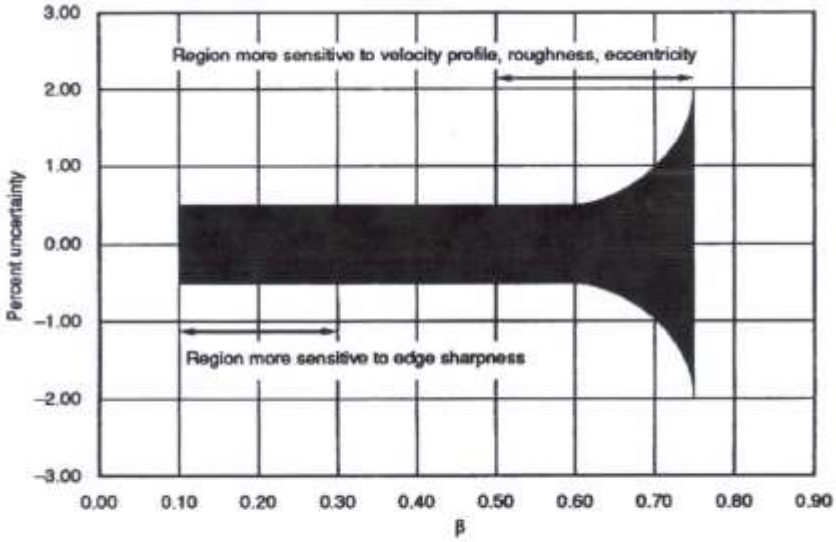

Notes:
1. Orifice plates whose bore diameters are less than 0.45 inch (11.4 millimeters),installed according to Report No. 3, Part 2, may have coefficient of discharge uncertainties as great as 3.0 percent. This large uncertainty is due to problems with edge sharpness.
2. The relative uncertainty level shown in the figure assumes a swirl-free inlet velocity profile.

Figure 1-6—Practical Uncertainty Levels

Figure 21 API 14.3.1, Figure 1-6 beta ratio uncertainty

In summary, many inlet meters at gas plants are not installed or operated under conditions which would meet custody transfer requirements. However, these meter are typically not used for fiscal accounting but for operational monitoring.

Section 8: Summary

In summary, the topics addressed in the paper mention some of the concerns with meeting the 98% gas capture requirement proposed on the gas gathering systems.

As the proposed rule is currently written, a gathering system without leaks would not be able to meet the 98% gas capture requirement. Without accounting for the actual levels of measurement uncertainty, phase change and liquid dropout, the gas gathering system has little to no chance that a volumetric balance across the system will result in the 98% gas capture requirement.

Section 9: References and Resources

American Petroleum Institute

- API Manual of Petroleum Measurement Standards (MPMS) Chapter 14 - Natural Gas Fluids Measurement, Section 1, Collecting and Handling of Natural Gas Samples for Custody Transfer
- API MPMS, Chapter 14, Section 3, Orifice Metering of Natural Gas and Other Related Hydrocarbon Fluids - Concentric, Square-edged Orifice Meters, Part 1, General Equations and Uncertainty Guidelines
- API MPMS Chapter 14, Section 3, Orifice Metering of Natural Gas and Other Related Hydrocarbon Fluids - Concentric, Square-edged Orifice Meters, Part 2, Specification and Installation Requirements
- API MPMS Chapter 14, Section 7, Mass Measurement of Natural Gas Liquids and Other Hydrocarbons

GPA Midstream Association

- GPA Standard 2166-05, Obtaining Natural Gas Samples for Analysis by Gas Chromatography
- GPA Standard 8182-18 (API MPMS Chapter 14, Section 7, Mass Measurement of Natural Gas Liquids and Other Hydrocarbons)

Code of Federal Regulations

- 43 CFR Part 3170 Subpart 3175 – Measurement of Gas

Appendix:

Estimated Costs of Two Potential Regulations on Oil and Natural Gas Development in New Mexico

JOHNDUNHAM & ASSOCIATES
The Winning Side of Economics

MEMORANDUM

TO: New Mexico Oil & Gas Association
FROM: John Dunham, Managing Partner
DATE: September 14, 2020
RE: Estimated Costs of Two Potential Regulations on Oil and Natural Gas Development in New Mexico

The state of New Mexico is considering promulgating two regulations that will impact the development of the petroleum industry in that state. The first, would establish emissions standards for volatile organic compounds and nitrogen oxides for oil and gas production and processing sources located in certain areas of the state, while the second would require the capture of up to 98 percent of all natural gas produced in the state.

To date, no official rulemaking process has begun, however, the state has produced initial drafts and has opened a pre-petition comment period to seek public input on the proposed rule language to assist in identifying potential regulatory and technical issues, and areas that require additional clarification or modification.

The following is an examination of the potential cost of these two rules on oil and natural gas producers in New Mexico, along with an initial economic impact analysis of the effects of these costs. The analysis is being done using a model developed for the Western Energy Alliance by John Dunham & Associates in 2018, updated to reflect current well counts and petroleum prices in the state of New Mexico.

Summary

Based on data gathered from operators in New Mexico, the state and federal governments, and a model developed for the Western Energy Alliance in 2018, the two potential rules being proposed in New Mexico would cost operators as much as $3.4 billion to comply with in the first year, and a discounted $4.0 billion over the course of 5 years.

Table 1
Summary of Costs to the Oil and Natural Gas Industry in New Mexico Resulting from Potential Rules

		Total
Administrative Costs	$	611,620
Operational Costs	$	3,424,150,330
Total Costs	$	3,424,761,950
5-Year Costs	$	4,053,257,881
NPV 5-Year Costs	$	4,017,144,587

The increased costs would force operators to shut down marginal wells and forfeit the development of new plays in the state. This could lead to a loss of as many as 264 jobs in the petroleum production industry in New Mexico and cost the state's economy $56.5million annually. In addition, the state and its localities would receive $1.9 million less in tax revenue

from businesses and employees in the oil and gas industry. This does not include reduced royalty and severance tax revenues resulting from lower production.

Table 2
Economic Cost of Potential Rules on New Mexico's Economy

	Jobs	Wages	Economic Output
Direct	(96)	(9,103,692)	(29,996,499)
Supplier	(52)	$ (3,293,948)	$ (10,001,515)
Induced	(116)	$ (5,217,366)	$ (16,456,673)
Total	(264)	$ (17,615,005)	$ (56,454,687)

State and Local Business and Personal Taxes	$ (1,914,553)

The Model

In order to determine the economic impact of the two potential rules on the oil and natural gas industry in New Mexico, it is necessary to determine exactly how they would impact overall costs. As costs for developing projects rise, the number undertaken will fall. The key is to determine how the restrictions will impact:

1. Direct costs: For example, costs related to additional equipment;
2. Financial costs: Or those related to the cost of money resulting from increased delays;
3. Input prices: Higher costs for equipment and crews resulting from increased demand;
4. Revenues: Reduced revenues resulting from both wells not drilled and delays in well servicing.

These additional costs are run through the oil and natural gas well model developed for Western Energy Alliance by John Dunham & Associates (JDA) in 2018. The model was updated to reflect the current number of operating oil and natural gas wells in New Mexico,[1] as well as 2019 average prices for oil at the wellhead in New Mexico, and the citygate price for natural gas in the state.[2]

These figures are linked to the economic impact model and from that an estimate of lost jobs, economic activity and taxes are developed.[3]

The Western Energy Alliance model is based on a wide range of data sources and assumptions, each of which impacts the final results. JDA has strived to ensure that the assumptions are as cautious as possible leading to what is likely a low estimate of the overall cost of the proposed rule. Each of these assumptions, along with the data used in the development of the models, is detailed below:

1 *OCD Well Statistics*, State of New Mexico, Oil Conservation Division, August 3, 2020 at: http://www.emnrd.state.nm.us/OCD/statistics.html.
2 Wellhead price data are not available.
3 Western Oil & Natural Gas Employs America, produced by John Dunham & Associates for Western Energy Alliance, 2018, at: https://legacy.westernenergyalliance.org/employsamerica

Average Drilling Costs are estimated based on data derived from the US Department of Commerce, Bureau of Economic Analysis, by the Minnesota IMPLAN Group in 2016. These data come from the Input/Output accounts of the United States. These data present detailed figures on the input costs for oil and gas well drilling including wages, capital costs, leasing costs, and costs of various materials and services used in the drilling and completion of oil and gas wells. The data are from 2016. The figures used in this model are based on the average cost per dollar of output (basically sales) multiplied by the estimated sale of oil and natural gas in each state as of 2019, which are the latest data available. Annual average prices and production volumes by state are gathered from the US Department of Energy.[4] Costs are divided between exploration/leasing/permitting, drilling and completion, with the distribution between these two processes based on the type of input and labor costs. About 52.4 percent of the drilling/ completion cost assumed to be for drilling and the rest for completion.[5]

Production Costs are estimated based on data derived from the US Department of Commerce, Bureau of Economic Analysis by the Minnesota IMPLAN Group in 2016. These data come from the Input/Output accounts of the United States. These data present detailed figures on the input costs for oil and gas production including wages, capital costs, leasing costs, and costs of various materials and services used in the exploration/leasing/permitting, production, infrastructure development and reclamation of oil and gas plays. The data are from 2016. The figures used in this model are based on the average cost per dollar of output (basically sales) multiplied by the estimated sale of oil and natural gas as of 2019 which are the latest data available. Annual average prices and production volumes by state are gathered from the US Department of Energy.[6] Costs are divided between different activities based on the type of input and labor costs are divided based on input commodity and service costs.

Anticipated Revenues are based on data from the US Department of Energy. It is simply equal to the annualized price of either oil or natural gas at the wellhead (by state), multiplied by annual production.[7] Revenues per well cannot be derived simply by dividing this by the number of producing wells since oil and gas wells tend to have either a hyperbolic or an exponentially declining production trend. Based on discussions with industry principles, a well will generally not be drilled and put into production unless it can recoup at least the direct drilling costs in the first year after completion. Using this assumption and a simple declining exponential function, the model suggests that about 97 percent of the production occurs in the first 4 years after drilling. The four-year production total (multiplied by the current price of either oil or gas) was used to estimate total revenue per well. Operating costs were then multiplied by 4 to reflect the economic life of each well.

The Number of Wells To Be Drilled is estimated based on data from individual state permitting authorities. Each authority uses different methods to identify whether wells are gas or oil (or both) and the wells' stage in the production process. While complete standardization between the states is not possible, in general it is possible to label a well as oil or gas, or as being in some stage of pre-production.

---

4 See for example: *Domestic Crude Oil First Purchase Prices by Area*, US Department of Energy, Energy Information Administration, at: www.eia.gov/dnav/pet/pet_pri_dfp1_k_a.htm

5 The model is based on average costs and revenues. These can vary greatly by play, product and individual well.

6 See for example: *Domestic Crude Oil First Purchase Prices by Area*, US Department of Energy, Energy Information Administration, at: www.eia.gov/dnav/pet/pet_pri_dfp1_k_a.htm

7 Ibid.

The Number of Producing Wells is also estimated based on data from individual state permitting authorities. Again, each authority uses different methods to identify whether wells are gas or oil (or both) and the wells' stage of production. While complete standardization between the states is not possible, in general it is possible to label a well as oil or gas, and that it is in some stage of production. Water wells, disposal wells, capped wells, injection wells, and other operations not directly used to extract petroleum are not included.

Table 3 below outlines the number of oil and natural gas wells used in the model, as well as the estimated production and prices.

Table 3
Annual Production Statistics and Assumptions for New Mexico (2019 Data)

	Oil	Natural Gas	Total
Number of Wells			
High Production	32	219	252
Medium Production	6,725	17,550	24,276
Low Production	24,826	33,185	58,011
Total Wells	31,584	50,955	82,539
Production	Barrels	Million (Cu Ft)	
High Production	11,194,661	201,570	
Medium Production	229,452,338	1,307,450	
Low Production	90,254,701	310,514	
Total Production	330,901,700	1,819,534	
Prices	$53.01	$2.74	
Revenue	$17,541,099,117	$4,985,523	$17,546,084,640

On a per well basis, the data suggest (Table 4) that the vast majority of oil and natural gas wells generate very little in the way of revenue, and the potential costs of the rules under consideration would be so high as to encourage operators to simply cap the wells rather than continue to produce.[8]

Table 4
Average Estimated Production and Revenues by Well Type

	Oil	Natural Gas
Annual Production Per Well	Barrels/Yr	Million Cu Ft/Yr
High Production	347,723	918
Medium Production	34,117	74
Low Production	3,635	9
Average Annual Revenue Per Well		
High Production	$18,432,771	$2,516,432
Medium Production	$1,808,535	$204,121
Low Production	$192,715	$25,638

[8] Based on data originally developed for Western Energy Alliance, 2018. These data represent production figures across most of the western part of the country. A high production oil well is considered to be one producing over 400 barrel of oil equivalent (BOE) per day, a low production well is considered to be one producing between 1 and 15 BOE per day. Data taken from *Distribution and Production of Oil and Gas Wells by State*, EIA website: http://www.eia.gov/pub/oil_gas/petrosystem/petrosysog.html. Data retrieved 05/06/2014

As the analysis below will show, as wells become uneconomical due to higher regulatory costs, production slows and jobs in the industry are eliminated. Based on a model developed for Western Energy Alliance in 2018, the oil and natural gas industry is a major part of the New Mexico economy, directly employing nearly 7,740 FTE people, and creating a total of almost 25,820 FTE jobs.[9] All told, the industry generates almost $6.9 billion in economic activity in the state, and firms and their employees pay state and local governments $233.4 million in taxes.[10]

Table 5
Economic Impact of Oil and Natural Gas Industry in New Mexico (2018 Baseline)

	Jobs		Wages		Economic Output
Direct	7,737	$	751,669,030	$	3,978,310,389
Supplier	6,917	$	436,862,521	$	1,326,459,201
Induced	11,165	$	500,176,207	$	1,577,661,247
Total	25,818	$	1,688,707,759	$	6,882,430,838
State and Local Business and Personal Taxes				$	233,404,461

Potential Rules

Ozone Non-Attainment Avoidance (VOC / NOx Rule)
The New Mexico Environmental Impacts Board is contemplating issuing rules restricting the emission of volatile organic compounds (VOCs) and nitrogen oxides (NOx) from sources located within counties that have areas with ambient ozone concentrations in excess of ninety-five percent of the national ambient air quality standard for ozone, including but not limited to Chaves, Eddy, Lea, Rio Arriba, Sandoval, and San Juan counties. Wells located in Bernalillo County, on Tribal Lands, and in other areas that are not within the Board's jurisdiction are expected to be excluded from the rules. These rules would impact roughly 97.3 percent of the existing oil and natural gas wells in New Mexico, with the remaining facilities operating in parts of the state that are excluded from the requirements.

Based on a reading of the language currently being proposed by the agency, oil and natural gas producers in these areas would face a minimum of 23 new administrative requirements that will need to be adhered to, as many as 23 provisions that will require additional equipment to be installed and maintained, and 15 provisions that will lead to new operational costs.

Venting and Flaring Rule
The New Mexico Oil Conservation Commission is examining two possible rules that would regulate the venting, flaring and collection of natural gas from oil and natural gas wells located in the state. In addition, the adoption of these two rules would lead to changes in at least three existing rules impacting oil and natural gas operations in the state.

Based on a reading of the language currently being proposed by the agency, oil and natural gas producers in these areas would be impacted by a wide range of requirements. According to the language in the document, there would be a minimum of 50 new administrative requirements that will need to be adhered to, as many as 10 provisions that will require additional equipment

[9] See: Western Oil & Natural Gas Employs America, prepared by John Dunham & Associates for Western Energy Alliance, 2018, https://legacy.westernenergyalliance.org/employsamerica
[10] Not including taxes and royalties on oil and natural gas production.

to be installed and maintained, 5 provisions that will require construction of new facilities, and 18 provisions that will lead to new operational costs.

These rules would impact the operation and maintenance of approximately 82,600 oil and natural gas wells in the state of New Mexico and would lead to a reduction of further development in the state.

Costs Associated With Potential Rules

Administrative Costs

The potential VOC / NOx rule changes imply that oil and natural gas producers in the state will be required to abide by approximately 25 new administrative requirements. Each of these will require that operators dedicate staff time that could otherwise be directed toward more productive activities. In its Regulatory Impact Analysis of similar rules conducted in 2015, the US Environmental Protection Agency (EPA) stated that recordkeeping and reporting requirements would equate to 92,658 labor hours for 2,552 facility owners and operators.[11] There is no source for where this data came from.

The analysis below uses wage rates from the Bureau of Labor Statistics for May of 2019, inflated to July 2020 dollars.[12] A mathematical average wage per hour for the occupations identified below is used. The median wage is multiplied by 1.3 to account for social insurance taxes, benefits, unemployment insurance and other labor costs assumed by the employer.

Table 6
Wage Rates Used in Analysis of Administrative Expenses (Annual)

Occupation	Median Wage	Adjusted All-in Median Wage
Accountants and Auditors	$ 59,620	$ 78,413
Engineers, All Other	$ 117,310	$ 154,287
Lawyers	$ 87,690	$ 115,331
Bookkeeping, Accounting, and Auditing Clerks	$ 37,400	$ 49,189
Information and Record Clerks, All Other	$ 41,710	$ 54,857
Legal Secretaries and Administrative Assistants	$ 36,900	$ 48,531
Average		$ 83,435
Hourly		$ 40.11

Based on the EPA analysis, the average number of recordkeeping hours per operator would be 36.3 per year. According to the most recent data from the Bureau of Labor Statistics, there are 193 establishments involved in the production of oil and natural gas in New Mexico.[13]

Assuming a similar administrative burden as the federal rule would mean that companies would spend 7,006 hours a year to comply. Since this rule would apply only to wells being operated in

[11] *Regulatory Impact Analysis of the Proposed Emission Standards for New and Modified Sources in the Oil and Natural Gas Sector,* U.S. Environmental Protection Agency, Office of Air and Radiation and Office of Air Quality Planning and Standards, August 2015.

[12] May 2019 State Occupational Employment and Wage Estimates: New Mexico. These are the latest data currently available.

[13] *Quarterly Census of Employment and Wages*, US Department of Labor, Bureau of Labor Statistics, at: https://www.bls.gov/cew/data.htm

specific counties, the requirement should be adjusted to account for those operations that are in other areas. Based on wells operating in New Mexico in 2018, 97.3 percent of the operations would be covered by the rule, reducing the administrative requirement to 6,817 hours. At a wage rate of $40.11, this equals $273,420 in administrative costs per year.

The potential venting and flaring rule changes imply that oil and natural gas producers in the state will be required to abide by approximately 50 new administrative requirements. Each of these will require that operators dedicate staff time that could otherwise be directed toward more productive activities. In its Regulatory Impact Analysis of similar rules conducted in 2016, the US Department of Interior, Bureau of Land Management (BLM) the BLM identified a total of 25 provisions that would impose administrative burdens on the industry. Many of these align with those being imposed by the NMOCC. The BLM estimated that the annual administrative burden of their natural gas collection rule would be 85,170 hours and that 2,000 companies would need to comply with those administrative rules, for an average of 42.59 hours of work per company. [14]

According to the most recent data from the Bureau of Labor Statistics, there are 193 establishments involved in the production of oil and natural gas in New Mexico.[15] Assuming a similar administrative burden as the federal rule would mean that companies would spend 8,332 hours to comply. At a wage rate of $40.11, this equals $338,200 in administrative costs per year.

Operational Costs

Using data from a survey of members conducted by the New Mexico Oil and Gas Association it is possible to calculate the operational costs that would be imposed by these rules on a per well basis.[16] Unfortunately, the survey data is aggregated and the effects of the two rules cannot be broken out separately. However, since the VOC / NOx rule applies to only certain parts of the state, those provisions are adjusted to account for those operations that are in other areas. Based on wells operating in New Mexico in 2018, 97.3 percent of the operations would be covered by the VOC / NOx rule.[17]

The preliminary proposed rules will place significant burdens on operators, both initially as wells are drilled and completed, and then over time, as operators are required to maintain systems and change their operational behaviors. The initial costs will consist mainly of new construction requirements as wells and collection systems are designed and built, and equipment requirements as old wells are retrofitted. According to the draft of the potential rulemaking, operators of oil and natural gas wells in New Mexico, as well as those operating gathering pipelines throughout the state, would be required to meet both the gas capture standards outlined by the state as well as the VOC and NOx requirements for 97.3 percent of the operations. Many of the same operational requirements (outside of administrative requirements) are included in both rules.

---

14 *Regulatory Impact Analysis for: Revisions to 43 CFR 3100 (Onshore Oil and Gas Leasing) and 43 CFR 3600 (Onshore Oil and Gas Operations) Additions of 43 CFR 3178 (Royalty-Free Use of Lease Production) and 43 CFR 3179 (Waste Prevention and Resource Conservation)*, U.S. Bureau of Land Management, November 10, 2016

15 Op. cit., *Quarterly Census of Employment and Wages*.

16 Survey data represents reporting by 10 companies.

17 Based on data from Western Oil & Natural Gas Employs America, produced by John Dunham & Associates for Western Energy Alliance, 2018, at: https://legacy.westernenergyalliance.org/employsamerica

Table 7
Additional Operational Costs Associated With Potential Rules

	Per Oil Well	Per Natural Gas Well	Oil Production Costs	Natural Gas Production Costs	Total Costs
RFID Tag	$ 281	$ 281	$ 8,635,476	$ 13,931,759	$ 22,567,236
Engines	$ 1,336	$ 1,336	$ 41,044,663	$ 66,218,047	$ 107,262,710
Compressors	$ 55	$ 55	$ 1,695,924	$ 2,736,064	$ 4,431,988
Open Flares	$ 6,152	$ 6,152	$ 189,056,185	$ 305,007,532	$ 494,063,717
Enclosed Combustion Devices (ECD) and Thermal Oxidizers (TO)	$ 9,681	$ 9,681	$ 297,513,847	$ 479,984,109	$ 777,497,956
Vapor Recovery Units	$ 5,866	$ 5,866	$ 180,281,569	$ 290,851,297	$ 471,132,867
Gas Well liquid Unloading	$ -	$ 2,813	$ -	$ 139,441,542	$ 139,441,542
Glycol Dehydrators	$ 9,681	$ 9,681	$ 297,513,847	$ 479,984,109	$ 777,497,956
Heaters	$ 86	$ 86	$ 2,647,521	$ 4,271,290	$ 6,918,811
Hydrocarbon Liquid Transfers	$ 2,813	$ -	$ 86,431,590	$ -	$ 86,431,590
pipeline pig launching and receiving	$ 2,813	$ 2,813	$ 86,431,590	$ 139,441,542	$ 225,873,132
pneumatic controllers and pumps	$ 1,689	$ 1,689	$ 51,917,957	$ 83,760,116	$ 135,678,073
Storage Tanks	$ 5,706	$ -	$ 175,352,753	$ -	$ 175,352,753
Stripper Wells	$ 1,966	$ 1,966	*	*	*
Total	$ 48,125	$ 42,419	$ 1,418,522,923	$ 2,005,627,407	$ 3,424,150,330

Note: Stripper well counts are not available

In sum, the operational and administrative costs of the potential rules could equal as much as $3.4 billion dollars in the first year, although they would fall significantly from then on.

NPV calculation

The costs of the two potential rules will not be one-time effects but will continue year after year. The bulk of the continuing costs would be administrative, however, there will be additional operational costs as well. Based on discussions with operators in New Mexico, JDA estimates that about 15.2 percent of the costs will continue each year, declining over time as wells are naturally removed from service. Over a 5-year period, assuming 2 percent inflation, the costs will equate to about $4.1 billion. Discounting this back to 2021 dollars using a discount rate of 5.54 percent,[18] the net present value of the stream of costs would be roughly $4.0 billion. See Table 8.

Table 8
Net Present Value of Costs Associated With Potential New Mexico Rules

	Total
Administrative Costs	$ 611,620
Operational Costs	$ 3,424,150,330
Total Costs	$ 3,424,761,950
5-Year Costs	$ 4,053,257,881
NPV 5-Year Costs	$ 4,017,144,587

[18] *ICE BofA US High Yield Index Option-Adjusted Spread*, Ice Data Indices, LLC, retrieved from FRED, Federal Reserve Bank of St. Louis; https://fred.stlouisfed.org/series/BAMLH0A0HYM2, September 9, 2020.

Conclusion: Economic Impact of Proposed Rules

Based on the Western Energy Model, if the costs outlined above are reflective of the entire industry in the state of New Mexico, the results could be devastating for the oil and natural gas sector of the economy. Were these costs to be incurred, it would be likely that 4.0 percent of the currently operating oil wells, and as many as 42.6 percent of the natural gas wells, would become unproductive in that they would lose money once the cost of the retrofits is put in place. These would predominately be the lower- and mid-range producing wells, so overall there would be a roughly 1.4 percent reduction in oil production and a 12.2 percent reduction in natural gas production.[19] Overall, there would be a 1.4 percent reduction in output of both oil and natural gas in terms of value.

Table 9
Economic Cost From Potential Regulations on the Oil and Natural Gas Industry in New Mexico

	Jobs	Wages	Economic Output
Direct	(96)	(9,103,692)	(29,996,499)
Supplier	(52)	$ (3,293,948)	$ (10,001,515)
Induced	(116)	$ (5,217,366)	$ (16,456,673)
Total	(264)	$ (17,615,005)	$ (56,454,687)

State and Local Business and Personal Taxes	$ (1,914,553)

As this impact passes through the economic system in New Mexico, it will surely lead to reductions in jobs. Looking at the baseline, there were about 25,820 jobs in the oil and natural gas industry in the state. The reduction would likely lead to 96 lost jobs directly in the oil and natural gas industry in the state, and a total of 264 lost jobs. The state economy would face a $56.5 million loss, and state and local taxes would fall by $1.9 million.

About John Dunham and Associates:

John Dunham and Associates (JDA) is a leading New York City based economic consulting firm specializing in the economics of fast-moving issues. JDA is an expert at translating complex economic concepts into clear, easily understandable messages that can be transmitted to any audience. Our company's clients have included a wide variety of businesses and organizations, including some of the largest Fortune 500 companies in America, such as:

- Altria
- Diageo
- Feld Entertainment
- Forbes Media
- MillerCoors
- Verizon
- Wegmans Stores

[19] Note that with the current slump in natural gas prices many of the existing natural gas wells are barely productive already.

John Dunham is a professional economist with over 30 years of experience. He holds a Master of Arts degree in Economics from the New School for Social Research as well as a Masters of Business Administration from Columbia University. He also has a professional certificate in Logistics from New York University. Mr. Dunham has worked as a manager and an analyst in both the public and private sectors. He has experience in conducting cost-benefit modeling, industry analysis, transportation analysis, economic research, and tax and fiscal analysis. As the Chief Domestic Economist for Philip Morris, he developed tax analysis programs, increased cost-center productivity, and created economic research operations. He has presented testimony on economic and technical issues in federal court and before federal and state agencies.

Prior to Phillip Morris John was an economist with the Port Authority of New York and New Jersey as well as for the City of New York.